# American Forces Radio & Television Service Broadcast Center

# Satellite Handbook

Version 2.09

Published May 1, 2003

**CHAPTER 1 : POLICY AND PROCEDURES FOR REQUESTING AFRTS SATELLITE SERVICE..... 1-1**

WHO IS AFRTS FOR AND WHAT IS ITS MISSION? ..... 1-1
HOW DO I REQUEST AFRTS SERVICE? ..... 1-1
WHAT DO I DO ONCE I HAVE THE DECODER? ..... 1-4
WHAT CAN THE ORGANIZATION DO IF THERE ARE NOT ENOUGH DOD PEOPLE TO JUSTIFY A FREE AFRTS DECODER OR THE FREE DECODER WILL NOT SERVE EVERYONE?..... 1-4
CAN I LEASE OR RENT A DECODER INSTEAD OF BUYING ONE?..... 1-4
CAN I BUY MY OWN DECODER?..... 1-6
REAUTHORIZATION OF DECODERS..... 1-6
RESALE OF DECODER ..... 1-6

**CHAPTER 2 : ACTIVATION PROCEDURES AND DATABASE MANAGEMENT. ..... 2-1**

HOW DO I GET THE DECODER AUTHORIZED? ..... 2-1
HOW LONG DOES IT TAKE TO GET THE DECODER TURNED ON? ..... 2-1
HOW DO YOU KEEP TRACK OF ALL THESE DECODERS? ..... 2-1
WHAT ARE THE DIRECT EXCHANGE (DX) PROCEDURES FOR AFRTS POWERVU EQUIPMENT? ..... 2-2
WHAT ARE THE REPAIR PROCEDURES FOR CUSTOMER PURCHASED POWERVU INTEGRATED RECEIVER DECODER (IRD) EQUIPMENT?..... 2-5
WHAT ARE THE REPAIR PROCEDURES FOR DECODERS FROM NAVY SHIPS AND FLEET SUPPORT DETACHMENTS? ..... 2-5

**CHAPTER 3 : AFRTS SATELLITE NETWORKS..... 3-1**

INTRODUCTION TO POWERVU..... 3-1
SATNET C-BAND SATELLITE AND JAPAN/KOREA KU-BAND SERVICES ..... 3-5
VIRTUAL CHANNEL GUIDE ..... 3-6
SATNET EUROPEAN KU-BAND SATELLITE SERVICES ..... 3-7
VIRTUAL CHANNEL GUIDE ..... 3-8
AFRTS DIRECT-TO-SAILOR SATELLITE NETWORK (DTS)..... 3-9
DTS SATELLITE NETWORK ARCHITECTURE ..... 3-9
VIRTUAL CHANNEL GUIDE ..... 3-11

**CHAPTER 4 : DIGITAL SATELLITE DOWNLINK RECEPTION .. 4-1**

TYPICAL SATELLITE TVRO EQUIPMENT CONFIGURATION..... 4-1
GENERAL SATELLITE CONCEPTS..... 4-1
THE RECEIVE SITE ..... 4-2
RADIO WAVES AND COMMUNICATIONS..... 4-2
RADIO WAVES ..... 4-2
*Signal Frequency ..... 4-2*
*Polarization..... 4-2*
ANTENNA REFLECTOR ..... 4-3
AMPLIFIERS "LNA/B/C/F" ..... 4-4

LNB PERFORMANCE ..... 4-6
FEEDHORN ASSEMBLY ..... 4-6
FEEDHORN ADJUSTMENTS ..... 4-7
POLARIZATION ..... 4-8
QUALIFICATION OF SATELLITE TERMINALS FOR DIGITAL RECEPTION ..... 4-8
EQUIPMENT NEEDED FOR SATNET C-BAND RECEPTION ..... 4-8
EQUIPMENT NEEDED FOR SATNET KU-BAND RECEPTION ..... 4-9
EQUIPMENT NEEDED FOR DIRECT TO SAILOR (DTS) C-BAND RECEPTION ..... 4-9
SOME NEW TERMS YOU SHOULD KNOW AND UNDERSTAND ..... 4-10
PROCEDURES FOR FINDING THE AFRTS DIGITAL SATELLITE SIGNALS ..... 4-11
OBTAINING YOUR SITE AZIMUTH AND ELEVATION ..... 4-11
*Step One: IRD Authorization ..... 4-11*
*Step Two: Finding a Clear line of Sight ..... 4-11*
*Step Three: Connecting the Antenna and Receiver ..... 4-12*
*Step Four: Locating the Satellite ..... 4-14*
*Step Five: Peaking the Antenna ..... 4-15*
*Step Six: Troubleshooting ..... 4-16*
SUN OUTAGES ..... 4-19
RF INTERFERENCE IN DIGITAL NETWORKS ..... 4-19
CURRENT TECHNOLOGY ..... 4-20
ERROR CORRECTION ..... 4-21
REACQUISITION ..... 4-21
CONCEALMENT ..... 4-21
SOURCES OF INTERFERENCE ..... 4-22
*Terrestrial Microwave Interference ..... 4-22*
*Impulse and Ignition Noise ..... 4-22*
*Aircraft Radar Altimeters/Airport Ground Radar ..... 4-23*
*Ship-board Radar ..... 4-23*
*Commercial Microwave Ovens ..... 4-24*
*Walkie-Talkies ..... 4-24*
*Personal Communications Systems ..... 4-24*
*Random RFI (Fluorescent and Sodium Vapor Lamps, Lightning) ..... 4-24*
PROTECTION FROM INTERFERENCE ..... 4-24
*Selecting a site ..... 4-24*
*Saturation and Compression ..... 4-25*
*Out-of-band Filtering ..... 4-25*
*RFI (Radio Frequency Interference) Fencing ..... 4-25*
*Earth Berms ..... 4-26*
SUMMARY ..... 4-26
DECODER SETUP INSTRUCTIONS SCIENTIFIC ATLANTA POWERVU (MODEL 9223) ..... 4-27
DECODER SETUP INSTRUCTIONS SCIENTIFIC ATLANTA POWERVU (MODEL 9234) ..... 4-29
REMOTE CONTROL PROBLEMS ..... 4-35
RECEIVER PROBLEMS ..... 4-35

**CHAPTER 5 : DISTRIBUTION OF MULTIPLE VIDEO AND AUDIO SERVICES ..... 5-1**

I. DOD CATV PERFORMANCE SPECIFICATIONS AND TESTING PROCEDURES ..... 5-1

*a. Assumptions regarding DOD Cable Systems:* ..... *5-1*
*b. System Characteristics:* ..... *5-2*
II. DISCUSSION ..... 5-2
*a. Authorization* ..... *5-3*
*b. Signal Leakage* ..... *5-3*
*c. Signal Quality* ..... *5-3*
*d. System Constraints* ..... *5-4*
III. TESTING PROCEDURES. ..... 5-5
APPLICABILITY OF TESTS ..... 5-5
SCHEDULING OF TESTS ..... 5-5
DIGITAL TELEVISION ..... 5-6
IV. OUT OF CONUS CATV ..... 5-6
V. COMMERCIAL CATV. ..... 5-7

**CHAPTER 6 : RADIO AND TELEVISION CUEING ..... 6-1**

AT AFRTS-BC ..... 6-1
*Normal Programming:* ..... *6-1*
*Live and Quick Turn-Around Programming:* ..... *6-1*
ENCODER INSTALLATION AND OPERATION ..... 6-2
DECODER INSTALLATION AND OPERATION ..... 6-5
CONTROLS AND INDICATORS ..... 6-6
1644 RELAY CARD ..... 6-6

**CHAPTER 7 : DATACASTING ..... 7-1**

TECHNOLOGY DESCRIPTION ..... 7-1
AFRTS INTERNATIONAL POWERVU DATACASTING CAPABILITIES ..... 7-1
64 KBPS HIGH SPEED DATA CHANNEL ..... 7-3
EQUIPMENT REQUIREMENTS ..... 7-4
MULTIPLEXER CONFIGURATION ..... 7-5
CBD (HARDWARE,CTS/RTS) FLOW ..... 7-6
SR-8 COMMANDS ..... 7-12
SR-8 SETUP ..... 7-13
1.544 MBPS HIGH SPEED DATA CHANNEL ..... 7-14
*Configuration* ..... *7-14*
*Cabling and Pin outs* ..... *7-15*
DATACASTING ON DTS (128 KBPS HIGH SPEED DATA CHANNEL) ..... 7-15
CONFIGURATION ..... 7-15
CABLING AND PIN OUTS ..... 7-16
1.544 MBPS AND 128 KBPS HIGH SPEED DATA TROUBLESHOOTING GUIDE ..... 7-17
IRD CONTROL AND POLLING FROM A REMOTE LOCATION ..... 7-18

**CHAPTER 8 : NEWSBOSS NETWORK ALERT SYSTEM (NAS) ..... 8-1**

WHAT IS NEWSBOSS? ..... 8-1
WHAT IS NAS? ..... 8-1

**CHAPTER 9 : CLOSED CAPTION SERVICE ..... 9-1**

**CHAPTER 10 : AFRTS DECODER DOWNLOAD PROCEDURES ..... 10-1**

9234 DECODERS ..... 10-1
9223 DECODERS ..... 10-2
HOW CAN I TELL IF I NEED AN OS DOWNLOAD? ..... 10-2
HOW TO READ POWERVU DECODER TIDS ..... 10-3

**APPENDIXES ..... 1**

APPENDIX A: VIRTUAL CHANNEL LISTINGS ..... 2
*AFNE Channel Guide ..... 4*
*DTS Virtual Channel Guide ..... 5*
VIRTUAL CHANNEL GUIDE FOR DATA SERVICES ..... 6
*AFNE Channel Guide ..... 7*
APPENDIX B: RF LINK BUDGETS ..... 8
*Typical SATNET C-Band Link Budget ..... 9*
*Typical SATNET Ku-Band Link Budget ..... 10*
*DTS Link Calculations ..... 11*
APPENDIX C: DISH POINTING DATA (USING MAGNETIC NORTH) ..... 11
APPENDIX D AFRTS SATELLITE INFORMATION ..... 19
*AFRTS ..... 19*
*INTELSAT 802 (Japan and Korea Only) ..... 19*
*INTELSAT 701 (Pacific Ocean Region) ..... 19*
*INTELSAT 707 (South America, Africa, and Atlantic Ocean Region) ..... 19*
*Telstar-5 (United States) ..... 20*
*HotBird 4 (Europe) ..... 20*
*Direct To Sailor (DTS) ..... 20*
*INTELSAT 701 (Pacific Ocean) ..... 20*
*INTELSAT 906 (Indian Ocean and Persian Gulf) ..... 21*
*New Skies NSS-7 (Atlantic Ocean and Mediterranean Sea) ..... 21*
*AMC-1 (Very large domestic dishes only) ..... 21*
LIST OF FIGURES ..... 22
INDEX ..... 1

# Chapter 1 : Policy and Procedures for Requesting AFRTS Satellite Service.

## *Who is AFRTS for and what is its mission?*

The American Forces Radio and Television Service (AFRTS) is an activity of the American Forces Information Service (AFIS) under the direction of the Assistant Secretary of Defense for Public Affairs (ASD/PA). The AFRTS mission is to provide radio and television information and entertainment programming to Department of Defense (DoD) personnel and their family members stationed overseas or at sea where English language broadcast service is unavailable or inadequate. The programs are representative of those seen and heard in the United States, and are provided without censorship, propagandizing or manipulation.

AFRTS is strictly non-commercial and is thus obligated to remove commercial announcements appearing in its programming sources. These commercials are replaced with spot announcements that communicate Department of Defense (DoD) internal information themes and public service messages of interest to DoD personnel and their family members. Since dissemination of internal and command information is the AFRTS mission, information and entertainment programs provided by AFRTS serve as excellent vehicles for this purpose.

AFRTS acquires the right to use television programming from many sources at extremely low cost. Most often, the cost to the government is no more than the program owner's administrative cost. Once acquired, we distribute the programs from the AFRTS Broadcast Center, with assurances to the program owners that we will take all reasonable actions to limit our distribution to Department of Defense personnel.

The AFRTS authorized audience is Department of Defense personnel and their families living and working overseas and privilege-holding employees of companies working DoD contracts. Since 1942, AFRTS has provided news, sports, information, and entertainment to this audience. Today, we operate in over 165 countries, have over 1,220 outlets around the world and are on Navy ships at sea, serving 1.5 million U.S. military personnel and their families. We must do everything in our power to ensure the continued availability of these programs for our service men and women. The loss of this programming would have a serious, negative effect on the quality of life for the soldiers, sailors, airmen, and Marines serving around the world who have become accustomed to this "touch of home." That is why we go to such great lengths to protect the copyrights of programs. The AFRTS audience also bears this responsibility and must protect programming from misuse.

## *How do I request AFRTS service?*

Contact headquarters AFRTS Operations at (703) 428-0616. The Department of Defense will provide (at no cost) a PowerVu decoder configuration (depends on

cabling, etc) to each location overseas where a sufficient number of DoD personnel are assigned. Installation of this decoder configuration is expected to directly benefit the DoD population (U.S. military members, their families, and DoD civilians who are currently assigned overseas) at that location. There is no objection, however, to sharing the service with collocated Department of State personnel. The agreement AFRTS has with its program suppliers (networks, syndicators, producers, etc.) stipulates that the programming will be available only to these authorized audience members.

The American Forces Information Service has two satellite services and has no objection to your receiving the AFRTS Satellite Network (SATNET) or the Direct to Sailors (DTS) signal provided the following conditions are met:

a) Placing or building a Television Receive Only (TVRO) satellite dish and receipt of the AFRTS signal is in concert with local host country agreements.

b) The downlink site will be recognized as an AFRTS, SATNET or DTS affiliate location.

c) The site must be registered with HQ AFRTS.

d) AFRTS programming must be restricted to U.S. DoD personnel, and may be distributed only on a closed circuit system in the approved location. Any rebroadcast (requests to rebroadcast should refer to 5120.20-R) or further distribution of the signal must be specifically approved by HQ AFRTS.

e) Distribution method must be protected and approved by HQ AFRTS.

f) In addition to the above, the organization needs to provide a point of contact along with the total Department of Defense audience figures at their location. Information should list numbers of personnel by military service, their family members, and DoD civilians.

g) AFRTS needs to know the type of satellite equipment you have or propose to use. Specifically, the size and type (wire mesh or solid panel) of dish, type of LNB (low noise block down converter amplifier) to include temperature and local oscillator stability and feedhorn. This information will help us determine if you have the correct equipment to access the signal. If you do not have this equipment, the Television-Audio Support Activity (T-ASA) will provide you the information needed to acquire it. T-ASA will also procure the equipment and install at the location if provided the funds. (Contact T-ASA at (916) 643-4189.).

There are several configurations of decoders available. The configuration you need depends on your distribution system. A single TV set needs only one decoder while a cable system requires a set of decoders depending on the number of TV and radio channels it can distribute.

The listing of standard decoder configurations that AFRTS uses is listed in table 1-1.

| Table 1-1 SRD* Equipment Configurations | | |
|---|---|---|
| **Designator** | **Equipment** | **Satellite Region** |
| **1. SRD-PAC-3** | **1 ea. 803-200**<br>**1 ea. 803-201**<br>**1 ea. 803-202**<br>**1 ea. 9234** | **Pacific** |
| **2. SRD-ATL-3** | **2 ea. 803-202**<br>**1 ea. 802-201**<br>**1 ea. 9234** | **Atlantic** |
| **3. SRD-EUT-3** | **2 ea. 803-202**<br>**1 ea. 803-200**<br>**1 ea. 9234** | **HOTBIRD 4** |
| **SRD-AME-3** | **1 ea. 803-202**<br>**1 ea. 803-201**<br>**1 ea. 803-200**<br>**1 ea. 9234** | **Domestic** |
| **SRD-4** | **2 ea. 802-202**<br>**1 ea. 803-201**<br>**1 ea. 803-200**<br>**1 ea. 9234** | **Pacific**<br>**Atlantic**<br>**HOTBIRD 4 AFRTS**<br>**Domestic** |
| **SRD-4-EUT/Cable** | **2 ea. 803-202**<br>**2 ea. 803-200**<br>**1 ea. 9234** | **HOTBIRD 4 Cable** |
| **SRD-6** | **2 ea. 803-202**<br>**2 ea. 803-201**<br>**2 ea. 803-200**<br>**1 ea. 9234** | **Pacific**<br>**Atlantic**<br>**Domestic** |
| **UK Cable** | **1 ea. 803-200**<br>**2 ea. 803-202** | **United Kingdom / HOTBIRD 4** |
| **DTS** | **3 ea. 803-201**<br>**1 ea 9234** | **DTS** |

***Simultaneous Receiver Decoder (SRD).** The acronym "**SRD**" is used by the American Forces Radio and Television (AFRTS) to denote a group of Individual Receiver Decoders (IRDs) configured for reception of multiple channels of SATNET and DTS AFRTS TV and radio services simultaneously. AFRTS SRDs are manufactured by Scientific Atlanta.

### *What do I do once I have the decoder?*

Once the decoder or decoders have arrived, please refer to the set-up directions for your area of the world in Chapter 4 of this booklet. Once the satellite dish has been installed and the decoder is receiving a locked+sig indication the decoder can then be authorized for AFRTS programming reception.

To request a decoder authorization customers should log on to the PowerVu Connect site at https://pvconnect.net. Select “authorize decoders. Customers should then complete the decoder authorization request form by filling in the decoders TID and UA number (Tracking ID and User Address) and other requested information. The decoder request information will be reviewed by AFRTS-HQ. Leased customer request authorizations must originate from the military exchange or store that leases the decoder. Individual requests for leased decoder authorization will be rejected. Approved authorizations should occur within 24 hours upon receipt of the request.

Customers may send an e-mail to afrts@pvconnect.net with "get form" in the subject block to receive an electronic form to fill out and return via e-mail.

If the Internet and e-mail access are not available to the requestor (remote locations), customers who purchased a decoder can contact the AFRTS-BC directly at (909) 413-2339, DSN 348-1339 Or AFRTS-HQ at (703) 428-0616, DSN 328-0616. IRD's will be entered manually into the https://pvconnect.net web site by “on-call” technologists receiving this information. Callers will need to have the Tracking Identification (TID) number and model number of each decoder available to provide to the technologist in order to activate the decoders.

### *What can the organization do if there are not enough DoD people to justify a free AFRTS decoder or the free decoder will not serve everyone?*

As a general rule, only one decoder or set of decoders (if cabled) is provided per location. If additional decoders are desired, they may be purchased by the organization (military unit or embassy), with HQ AFRTS approval, at an approximate cost of $565.00 each, depending on the type of decoder, plus shipping. Ancillary equipment such as the satellite dish, LNB, feedhorn and connecting cable can also be purchased via the Television-Audio Support Activity (T-ASA) the telephone number at T-ASA is (916) 643-4189.

Contact HQ AFRTS Operations at DSN 328-0616 or Commercial (703) 428-0290/0616, FAX (703) 428-0624, DSN 328-0624 or by email: decoders@hq.afis.osd.mil to request an organization purchase of decoders. Once approved, AFRTS will provide a letter to T-ASA authorizing the sale.

### *Can I lease or rent a decoder instead of buying one?*

AAFES and NEXCOM lease the Scientific Atlanta PowerVu decoders. The cost to buy the decoder and dish is about $600. The dish requires installation and a length of coaxial cable to connect the dish to the satellite receiver.

# Decoder Authorization

1821485717

**Complete the questions below and fax this form to (678) 402-2043.**

**For optimum accuracy, please print in capital letters within the edges of the box.**
**The following serves as an example:**

| | | | | | | | | | |
|---|---|---|---|---|---|---|---|---|---|
| 1 | 2 | 3 | 4 | 5 | 6 | 7 | 8 | 9 | 0 |

| | | | | | | | | | | | | |
|---|---|---|---|---|---|---|---|---|---|---|---|---|
| A | B | C | D | E | F | G | H | I | J | K | L | M |
| N | O | P | Q | R | S | T | U | V | W | X | Y | Z |

## APPLICANT'S INFORMATION

First Name

Last Name

eMail Address (if available—.mil or .gov addresses preferred)

Mailing Address (APO address if available)

City

State

Zip Code

Country

Work Phone (DSN plus commercial phone number, with country code)

Home Phone (with country code)

City in which decoder will be used

Country in which decoder will be used

DEROS - Date of return to US from overseas (YYYY - MM - DD)

**Military Status**

- O Active Duty Air Force
- O Active Duty Army
- O Active Duty Marine Corps
- O Active Duty Navy
- O DoD Civilian
- O Military Retiree
- O Department of State employee
- O Other

**Decoder Source**

- O AFRTS
- O AAFES Store
- O NEX Store
- O Navy (DTS)
- O State Department
- O From an Individual
- O From a company (Industry)
- O Other

## Decoder tracking identification (TID) and UA number

You will find the TID and UA numbers on a sticker on the back of your decoder

Tracking Identification (TID)

UA Number

- O Purchased
- O Leased

## Certification

I certify that I am a US citizen with shopping privileges at overseas exchanges and that I will use the decoder described above for the private entertainment of my family.
I further agree that if I sell the decoder, I will only sell it to another US citizen with shopping privileges at overseas exchanges.

Signature

Date YYYY / MM / DD

**Submit reauthorization requests at least one month before current authorization is to expire (original DEROS date or three years after date of original authorization request).**

## *Can I buy my own decoder?*

AFRTS cannot sell decoders to private individuals. Although HQ AFRTS approves the sale of decoders to commands AAFES or NEXCOM now sells and leases the equipment to authorize individuals. Decoders bought though Internet web sites such as Ebay.com will not work on our system and will not be authorized to receive programming.

For updates on the leasing process contact HQ AFRTS Operations at DSN 328-0616 or commercial 703-428-0616, FAX (703) 428-0624, DSN 328-0624, or email: afrtpol@hq.afis.osd.mil.

## *Reauthorization of decoders*

Authorizations expire upon the owner's DEROS or three years after the date of the initial authorization request. If you are remaining overseas more than three years, you must resubmit the authorization request to the email, FAX or URL below. Information must be sent from an official (.mil or .gov) email address OR it must be accompanied by a scan or copy of the front of the owner's military, State Department or retiree ID card. To avoid a break in service, submit your reauthorization request at least a month before your current authorization expires.

## *Resale of decoder*

You may only sell a decoder to another authorized audience member. The original owner should submit a request to transfer authorization as soon as possible to ensure continuity of service. The original owner should indicate that the decoder was sold second-hand (not from AAFES/NEX) and should provide the new owner's name, along with a completed request for authorization. As with reauthorizations, the information must be sent from an official (.mil or .gov) email address OR it must be accompanied by a scan or copy of the new owner's military, State Department or retiree ID card. Information must be sent to email, FAX, or URL below.

You can send the information two ways.

- You can fax it to DSN 312-328-0624, commercial: 001 703 428 0624.
- You can email the information to: **decoders@hq.afis.osd.mil**.
- http://afrtsdecoder.afis.osd.mil/DAForm.html.
- You may also download a faxable form from http://www.afrts.osd.mil/powervu/Auth.htm.

Please type or carefully print the necessary information—AFRTS will not process applications with illegible or incomplete information.

# Chapter 2 : Activation Procedures and Database Management.

## *How do I get the decoder authorized?*

When you have received the decoder, refer to the set-up procedures for your area of the world in Chapter 4 of this booklet. To request a decoder authorization customers should log on to the PowerVu Connect site at https://pvconnect.net. Select “authorize decoders. Customers should then complete the decoder authorization request form by filling in the decoders TID and UA number (Tracking ID and User Address) and other requested information. The decoder request information will be reviewed by AFRTS-HQ. Leased customer request authorizations must originate from the military exchange or store that leases the decoder. Individual requests for leased decoder authorization will be rejected. Approved authorizations should occur within 24 hours upon receipt of the request.

Customers may send an e-mail to afrts@pvconnect.net with "get form" in the subject block to receive an electronic form to fill out and return via e-mail.

If the Internet and e-mail access are not available to the requestor (remote locations), customers who purchased a decoder can contact the AFRTS-BC directly at (909) 413-2339, DSN 348-1339 Or AFRTS-HQ at (703) 428-0616, DSN 328-0616. IRD's will be entered manually into the https://pvconnect.net web site by “on-call” technologists receiving this information. Callers will need to have the Tracking Identification (TID) number and model number of each decoder available to provide to the technologist in order to activate the decoders.

## *How long does it take to get the decoder turned on?*

It is the goal of HQ AFRTS to activate your decoder within 24 hours after receiving your request. Once the owner and location of the decoder has been verified in the AFRTS database, the decoder will be activated. The decoder will stay activated unless it is physically turned off by HQ AFRTS Operations.

## *How do you keep track of all these decoders?*

All locations possessing an AFRTS PowerVu decoder are entered into the main AFRTS decoder database. Information about each site is kept. The information includes: what type and how many decoders are at the location; the TID numbers of the decoders, what satellite they look at; what size satellite dish they have; how the signal is distributed to the viewers, a point of contact, commercial phone number, fax number, e-mail address, DSN telephone number, shipping address, viewing population data, and other remarks that help us identify who we are serving. It is maintained by HQ AFRTS Operations.

## *What are the direct exchange (DX) procedures for AFRTS PowerVu equipment?*

The direct exchange (DX) procedure is based upon the Television-Audio Support Activity (T-ASA) External Policy and Procedure, dated August 29, 1996 and provides DX procedures for all models of AFRTS provided Power Vu Integrated Receiver-Decoders (IRD). Customer purchased equipment is discussed later in this chapter.

All activities will operate in accordance with these procedures. Local repair of PowerVu equipment is NOT authorized.

When it is determined that a piece of Power Vu Equipment is defective, furnish the following information:

- Model number(s) of the defective unit(s). Rack mountable commercial 9223 IRDs are provided in three Models: 803-200, 803-201 and 803-202. These model designations are provided as part of a bar code on the front of the units. The set top unit that uses a remote control is Model 9234.
- Tracking identification number(s) (TID). The 9223 units are marked with the TID as a part of the front panel bar code. The TID for 9234 IRDs is on the bottom of the equipment or on the rear.
- Quantity, by model, of defective units. Please provide us the number of defective decoders by model number. Example: (2) 202s, (3) 201s, (13) and 9234s.
- Symptoms of defect(s). Provide as much information as possible to assist with the troubleshooting and repair of the equipment.
- Point of contact (POC) should include: name, telephone number (DSN/commercial), Fax number (DSN/commercial) and, if possible, the E-Mail address.
- Return shipping address.

Notifications of defective equipment are preferred via E-Mail, however, fax, letter, or messages are acceptable alternatives.

**E-Mail Addresses:**

To: **powervu@tasa-exchange.army.mil**

cc: **afrtops@hq.afis.osd.mil**

**afrteng@hq.afis.osd.mil**

**dee@dodmedia.osd.mil**

**Mailing addresses:**

To: Television-Audio Support Activity

Attn: Video Compression (DX Program)
3230 Peacekeeper Way Bldg 209
McClellan, Ca. 95652-2600

cc: Armed Forces Radio and Television Service
601 N. Fairfax Street, Room 360
Alexandria, VA 22314

American Forces Radio and Television Service
Broadcast Center
1363 Z Street
Building 2730
March ARB, CA 92518

**Message addresses**:
To: CDR TASA SACRAMENTO CA
Info: AMFINFOS WASHINGTON DC//AFRTS//
CDR AFRTS BC MARCH FLD CA//DOEE//

**Fax numbers:**
T-ASA: Commercial (916) 643-4448
AFRTS: DSN 328-0624
AFRTS: Commercial (703) 428-0624
AFRTS-BC: DSN 348-1457
AFRTS-BC Commercial: (909) 413-2457

Upon receipt of a notification of defective equipment, Scientific Atlanta (SA) will be contacted and requested to provide a Return Materiel Authorization (RMA) number and the address to ship the defective unit. TASA will then advise all parties of the RMA and the shipping address. Do not ship until you are given disposition instructions by TASA. Additionally, the AFRTS-BC will de-authorize the defective unit(s) in the decoder database.

Ensure that the equipment is packed properly, marked and shipped by traceable means. The remote control must be included with the shipment of a desktop D9234 decoder.

Notify TASA with complete shipping information of the defective equipment being returned for repair.

TASA will ship a replacement, if available. TASA will provide the TCN, method, mode, and date of shipment.

**Technical Points of Contact:**

**AFRTS HQ**:

Commercial (703) 428-0289,

DSN 328-0289

E-mail: **afrteng@hq.afis.osd.mil**

**AFRTS-BC**

Duty Engineer, commercial (909) 413-2236, then Press 2

DSN 348-1236, and ask for the engineer.

E-mail: **dee@dodmedia.osd.mil**

**T-ASA Engineering**

Commercial (916) 643-6652

Fax Commercial (916) 643-3064

E-mail: **tasaeng@tasa-exchange.army.mil**

**T-ASA Logistics**

Commercial (916) 643-4597

Fax commercial (916) 643-4448,

E-Mail: **powervu@tasa-exchange.army.mil**

**HQ AFRTS Operations:**

Commercial DSN 328-0616 or commercial 703-428-0616

Fax commercial (703) 428-0624, DSN 328-0624

E-Mail: **afrtops@hq.afis.osd.mil**

**HQ AFRTS Policy:**

Commercial (703) 428-0290, DSN 328-0290,

Fax commercial (703) 428-0624, DSN 328-0624

E-Mail: **afrtops2@hq.afis.osd.mil**

## *What are the repair procedures for customer purchased PowerVu Integrated Receiver Decoder (IRD) equipment?*

PowerVu IRD equipment, which has been purchased by military commands, is considered customer purchased equipment and is returned for repair to the manufacturer, Scientific Atlanta. To exchange or return customer purchased PowerVu equipment; the unit's representative should contact Scientific Atlanta at the number below. Ask for a return material authorization (RMA) to return the IRD for repair. The Scientific Atlanta automated attendant will route the caller to the company's Technical Assistance Center or to a Customer Service Representative. Scientific Atlantic's facility is manned from 8:00 a.m. to 5:00 p.m. (Eastern Standard Time). Telephone assistance is available after hours through an answering service and is billed at $75 an hour.

**Scientific Atlanta Technical Assistance Center**

Commercial: (888) 949-4786 (toll free US/Canada)

(770) 236-4786 (from outside CONUS or Canada)

Fax (770) 236-5567

Customer Service Rep: Susan Ramkishun

Phone: (416) 299-6888

E-mail: susan.ramkishun@sciatl.com.

Scientific Atlanta's Customer Service Representative will provide the appropriate shipping address

## *What are the repair procedures for decoders from Navy Ships and Fleet Support Detachments?*

Navy personnel will contact the nearest FSD when they have a defective decoder. The FSD will do a one-for-one exchange taking the broken decoder and replacing it with a working one. The FSD then requests an RMA number from TASA to return the broken decoder to Scientific Atlanta for repair. The FSD will ship the decoder directly to Scientific Atlanta. Finally Scientific Atlanta will send the repaired unit back to FED EX to the Naval Media Center's warehouse.

# Chapter 3 : AFRTS Satellite Networks

American Forces Radio and Television Service (AFRTS) uses a combination of domestic and international satellites to deliver radio and television programming and data products to its audience around the world. Two satellite networks are in place: the AFRTS Satellite Network (SATNET) and the AFRTS Direct-To-Sailor Satellite Network (DTS). SATNET is made up of a C-Band satellite service to the Atlantic (AOR) Ocean Region, and Ku-Band satellite services, which are available in the greater European and Southwest Asia theatres, and Japan and Korea. DTS satellite services are broadcast on C-band and are available in three service areas: the Pacific Ocean Area (POR), the Atlantic Ocean Area (AOR), and the Indian Ocean Region (IOR). The network operating system for the SatNet network is an MPEG-2 video compression system broadcasting multiple channels of television, radio and data services. The DTS network uses a similar system using MPEG-1 video compression. The program material for the domestic and international legs of the SATNET C-band Service and the DTS networks originate from the AFRTS Broadcast Center (AFRTS-BC) located at March Air Reserve Base east of Los Angeles, California. Programming for the European leg of the network, known as SATNET Ku-band Service, originates from the AFRTS-BC with regional programming added by AFN Europe located in Frankfurt, Germany. Programming for the Pacific Ku band service also originates from AFRTS-BC with regional programming by AFN Pacific located in Tokyo Japan.

## *Introduction to PowerVu*

AFRTS uses a digital video compression system that allows for the delivery of multiple channels of programming simultaneously over each of the satellite networks described above. The Scientific Atlanta PowerVu system is used by AFRTS and was designed to conform to the Moving Picture Experts Group (MPEG) and European Digital Video Broadcasting (DVB) standards for digital video compression. PowerVu is a full MPEG digital video compression system which not only provides AFRTS with a flexible operating system for multiple channel transmission, it also provides state-of-the-art network and subscriber management capabilities combined together into one satellite transmission stream. PowerVu also provides for encryption, which ensures that only authorized users have access to AFRTS programming. One of the most powerful capabilities of PowerVu is the Virtual Channel feature, which allows AFRTS-BC to create various programming channel combinations to suit audience needs. Other features include the use of error correction, which helps to overcome noisy satellite transmissions.

Historically, television broadcasting has placed a great demand on satellites, particularly in terms of bandwidth and transmit power. The television signal contains an extraordinary amount of electronic information, all of which needs to be received by the viewer’s television set in order to recreate acceptable pictures and sound. There is a direct relationship between the amount of electronic information transmitted (more is better) and the bandwidth and power used for

that transmission. Simply put, the information transmit rate is directly proportional to the bandwidth required and, assuming all other factors being equal, the bandwidth is directly proportional to the amount of power required. The size of the required receive antenna is inversely proportional to the effective isotropic radiated power (EIRP) from the satellite. The AFRTS system takes advantage of the relationship between bandwidth and power in a couple of ways.

First, the system uses video compression technology to squeeze multiple television channels into the same transmitted channel bandwidth as was used by the previous AFRTS transmission scheme for a single channel. Secondly, by reducing the information rate but not reducing the power means, particularly in the case of DTS, that there is more power available for each bit of transmitted information. In more technical terms there is a higher ratio of energy per data bit in the transmit data stream and this translates ultimately into a reduction in the size of the receive antenna required to produce acceptable pictures and sound.

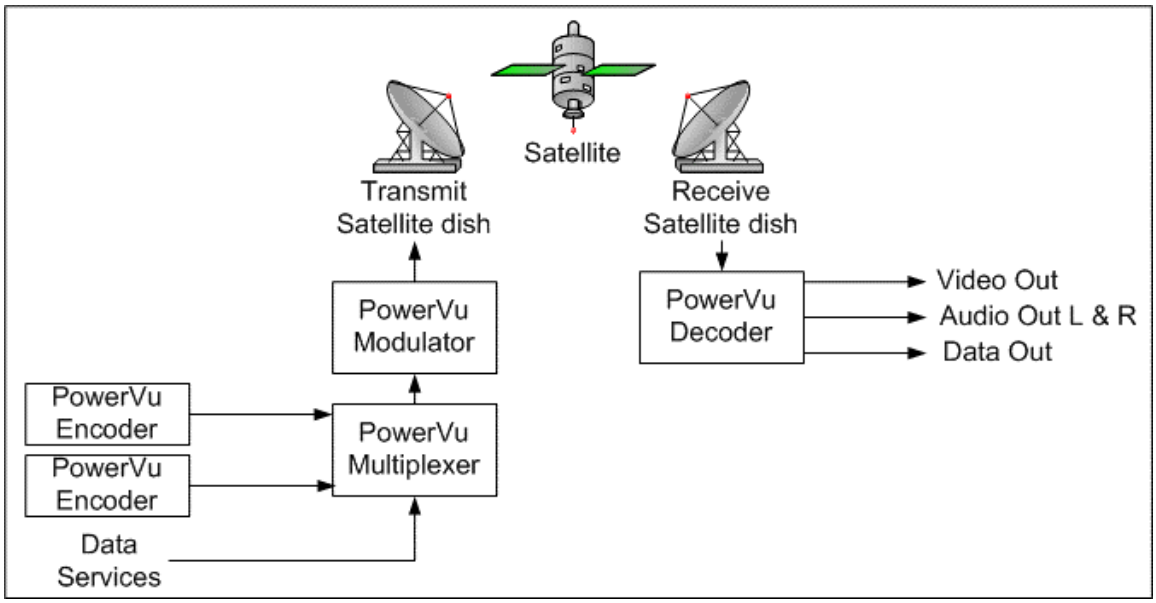


**Figure 3-1 Block level system diagram**

Figure 3-1 shows a simplified block diagram of the PowerVu system of MPEG-2 encoders, multiplexer, transmission, and decoding equipment. Analog video and audio signals are presented to PowerVu encoders where they are converted into digital signals and then compressed into an MPEG format. The compression process removes digital bits that are either not needed by the PowerVu system, or are redundant picture and sound information that PowerVu temporarily removes during satellite transmission and then reinserts during the process of restoring the original signals in the compression decoder. In the AFRTS system as many as eight encoders feed a single PowerVu multiplexer which performs several functions including combining of multiple encoder signals, addition of utility data to the combined data stream, signal encryption or scrambling, and processing of program guide information. The multiplexer's output signal is then modulated and amplified for transmission over a satellite link. At a satellite downlink, a PowerVu Integrated Receiver Decoder (IRD) performs all of the

necessary functions to receive, demodulate, and decode the video, audio, and data signals from the single MPEG data stream.

AFRTS employs encryption and scrambling in its PowerVu operating system to ensure that only authorized viewers are able to receive programming. The PowerVu system not only allows AFRTS to individually control both the general overall authorization of compression decoders, that is controlling whether or not a decoder can receive and decode the MPEG signal, but it also provides for the control of individual services available to the decoder. For example, AFRTS can blackout an individual channel or program authorization to a single decoder if the need ever arises.

Once the picture and sound information are converted into MPEG digital bit streams by the PowerVu encoders, it is possible to mix and match video data from one source with audio data from another to create a totally unique channel. This is the basic concept of PowerVu virtual channels and it is a capability that AFRTS has taken advantage of in the design of the various satellite networks. The operational and technical needs of a cable television head end operator may differ significantly, for example, from that of an AFRTS affiliate broadcast station. As was mentioned earlier, the PowerVu compression decoders can be outfitted with a wide range of options such as up to four channels of stereo radio programming. The PowerVu system allows AFRTS the ability to match, for example, entertainment television programming which has been timed for a particular geographic region with similarly programmed radio services. PowerVu also allows for the manipulation of the utility and high-speed data programming by means of the virtual channel feature.

The MPEG standard was designed with a degree of extensibility, which is the ability to add services to the transmission signal other than television and radio programming. One of these services that PowerVu provides and AFRTS is taking advantage of is utility data service. The utility data feature of PowerVu has been designed to be very simple and can be thought of as a data pipe. A PC or other data source simply transmits the serial data into the multiplexer by way of a communications program, and it is available without modification at the decoder as though it had been transmitted through a computer network cable.

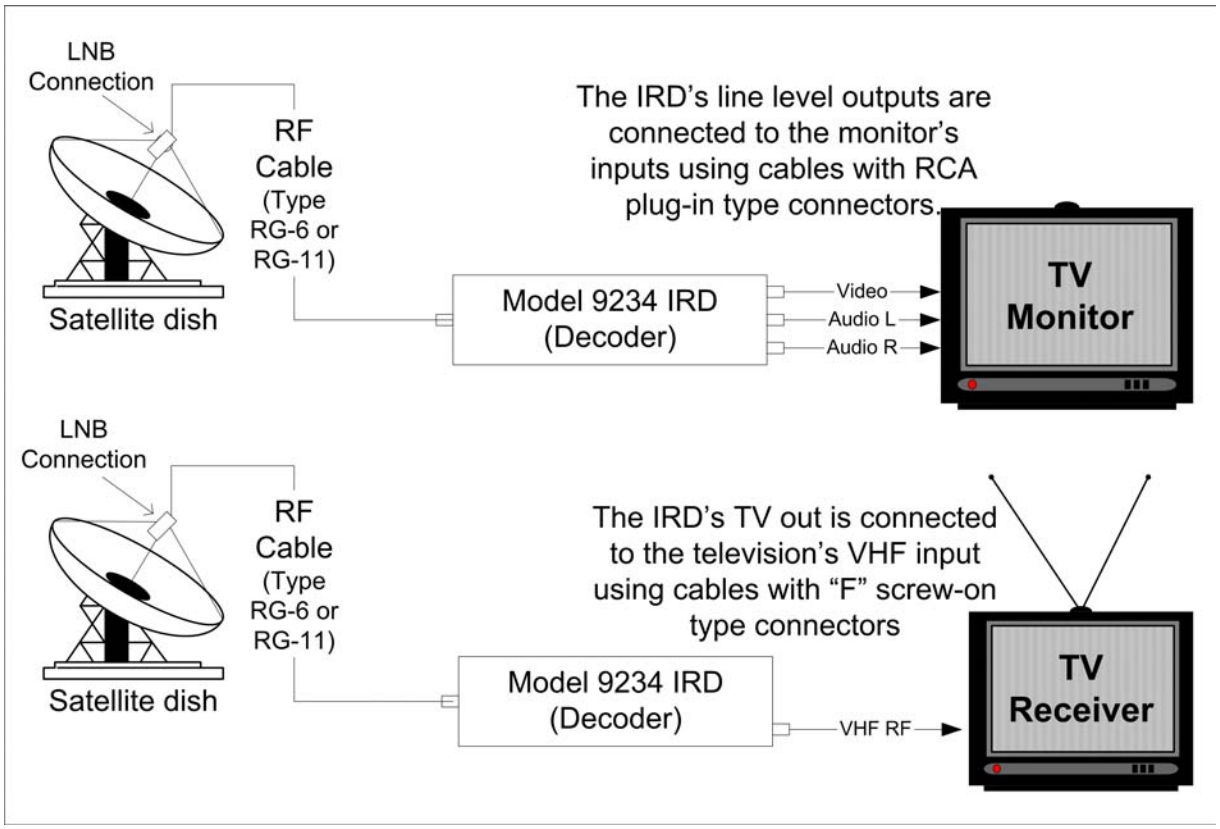


**Figure 3-2 Connecting an IRD to a monitor or TV receiver**

The integrated receiver/decoder (IRD) is a primary link to AFRTS satellite broadcasts. Without a properly authorized and configured IRD it is not possible to use or access any of the television or radio programming or data services provided by AFRTS. The compression decoder is designed to receive and decode the satellite signal and then to demodulate, decompress, and decrypt the available and authorized programming services. Figure 3-2 shows typical block diagrams of the connection between a satellite antenna, a PowerVu IRD, and the users own equipment. All PowerVu IRDs are designed to be connected to a satellite Frequency (RF) signal that is in the L-band frequency range between 950 and 1450 MHz. However, the satellite technology in use today does not allow for transmissions back to earth in that frequency range. Users wishing to receive any of the AFRTS satellite signals directly must outfit their antennas with a Low Noise Block Converter Amplifier, or LNB. The signal from the LNB output is connected directly to, in most cases, the input of the IRD and, as Figure 3-2 shows, the video and audio outputs from the IRD are connected directly to the users equipment. The user then simply changes the IRD to a virtual channel, and provided the IRD is authorized by AFRTS, receives the television and radio services of that virtual channel much like any cable or direct-to-home television service in the world.

## *SATNET C-Band Satellite and Japan/Korea Ku-band Services*

AFRTS-BC compiles the video and audio programming from the major US television and radio networks such as ABC, CBS, NBC, FOX and ESPN. Data

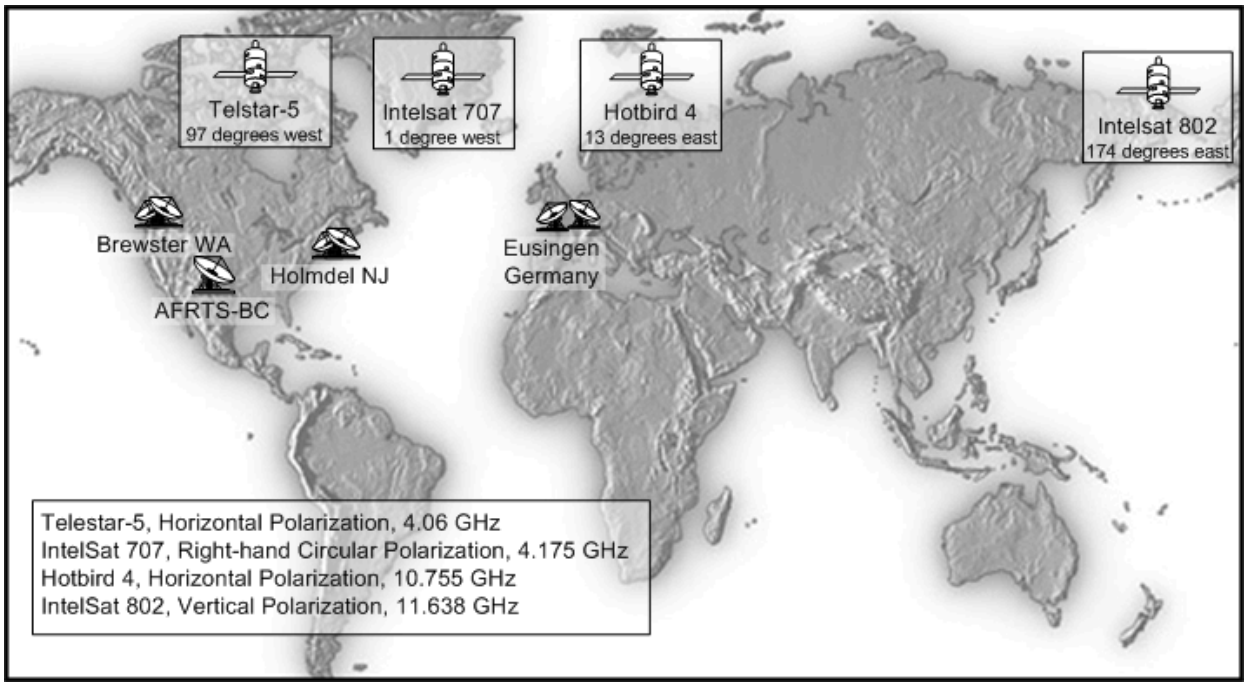


**Figure 3-3 AFRTS SATNET network diagram**

programming is supplied to AFRTS-BC from a variety of DoD and commercial sources. All of this programming is then electronically manipulated into the unique SATNET television, radio, and data channels that are then transmitted around the world. Figure 3-3 shows the overall SATNET architecture. The domestic and international SATNET C-band feeds originate at AFRTS-BC where the signal is up linked to Telstar-5 located at 97° west. The satellite feed from Telstar-5 is received by AFRTS customers located within the domestic satellite footprint at locations. Refer to Figure 3-4 for the satellite signal coverage from Telstar-5.

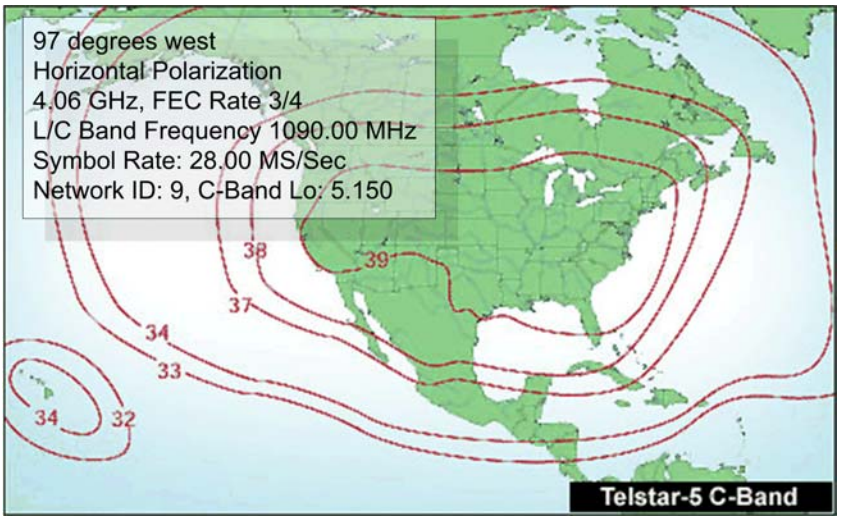


**Figure 3-4 AFRTS SATNET Telestar 5 footprint**

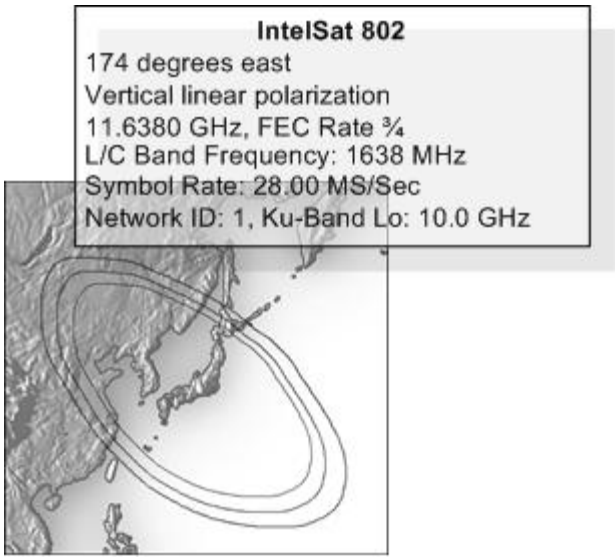


**Figure 3-6 AFRTS SATNET INTELSAT 802 footprint**

Also receiving the domestic satellite feed are two international satellite gateways: the West Coast gateway located at Brewster, Washington; and the East Coast gateway located at Holmdel New Jersey. The gateway at Brewster transmits the SATNET Ku-band service to the international satellite located at 174° East for Direct-To-Home (DTH) service to both Japan and Korea audiences. Refer to Figure 3-5 for the satellite footprint for this satellite. Similarly, the gateway in Holmdel transmits the same SATNET C-band service to the international satellite located at 1° West (359° East); its footprint can be found on Figure 3-6. Pacific Ocean areas not served by the Direct-to-Home service in Japan and Korea can receive DTS signals from an international satellite at 180 degrees East.

## *Virtual Channel Guide*

Appendix A provides the virtual channel information for the SATNET C-band Service. Appendix D provides additional satellite parameters.

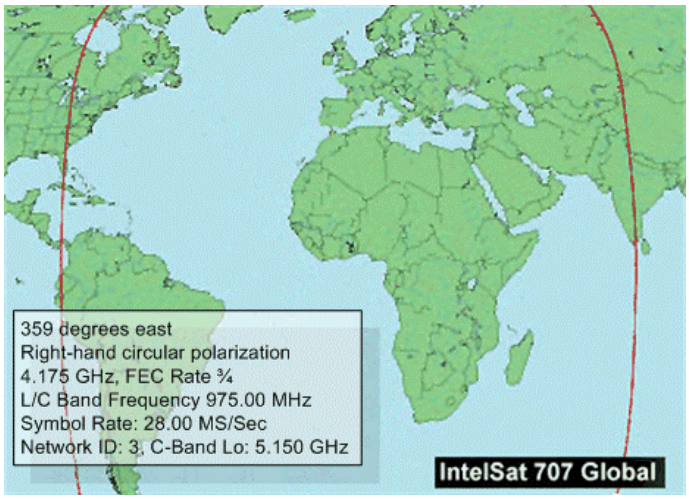


**Figure 3-5 AFRTS INTELSAT 707**

The AFN News channels provides 24 hour a day timely news, news features, business and military news as gathered from the major networks.

The AFN Sports channel features sporting events, sporting news, and feature sports programming.

The AFN entertainment television channels are similar to mainstream commercial television in terms of look, but surpass it in terms of content, featuring the best of American television. Each entertainment channel is programmed and scheduled to best serve a geographic audience; AFN Atlantic is programmed for the European audience; AFN Pacific for the Asian and Western Pacific audiences; and AFN Korea for the audience in Korea.

The Spectrum channel is made up of programming which features movies, the best of Public Broadcasting Service, Arts & Entertainment (A&E), Discovery Channel, History Channel, and classic series and cartoons. This service is packaged into eight-hour segments that are shown three times, each eight-hour segment presenting an alternative family oriented program for each major time zone during prime time.

The Pentagon channel is produced by the AFRTS NewsCenter in Washington DC and provides extended coverage of many events that the major news networks may not necessarily cover in their entirety. The Pentagon Channel's current daily schedule includes live events such as Pentagon Press and Operational Briefings, Secretary of Defense town hall meetings, Central Command Press and Operational Briefings, State Department and White House briefings, Capitol Hill testimony by Defense officials and other relevant events available from the National Network Pool.

Multiple types of radio programming are available on SATNET: The AFN Uninterruptible Voiceline radio service includes news, commentary, and special feature radio programming from a variety of U.S. commercial radio networks including AP, UPI, and CNN all on a 24-hour basis. The AFN Voiceline radio service offers the same news and commentary programming but breaks away to provide alternative live sports programming at various times. Approximately two to five games are provided Monday through Friday, and five to seven during the weekends. Playoff and championship series will increase this number slightly. Music radio services include jazz, classical and information programs from National Public Radio; adult contemporary; urban contemporary; top-40, and Pure Gold "oldies". In addition there is a mainstream country service, adult rock, and Z-Rock (hard rock).

Data products are transmitted over SATNET using PowerVu utility data channel. Refer to chapter 7of this handbook for information on data services provided by AFRTS.

## *SATNET European Ku-Band Satellite Services*

The American Forces Network (AFN-Europe) affiliate station located in Frankfurt, Germany downlinks the SATNET C-Band service and adds local European News and Information to

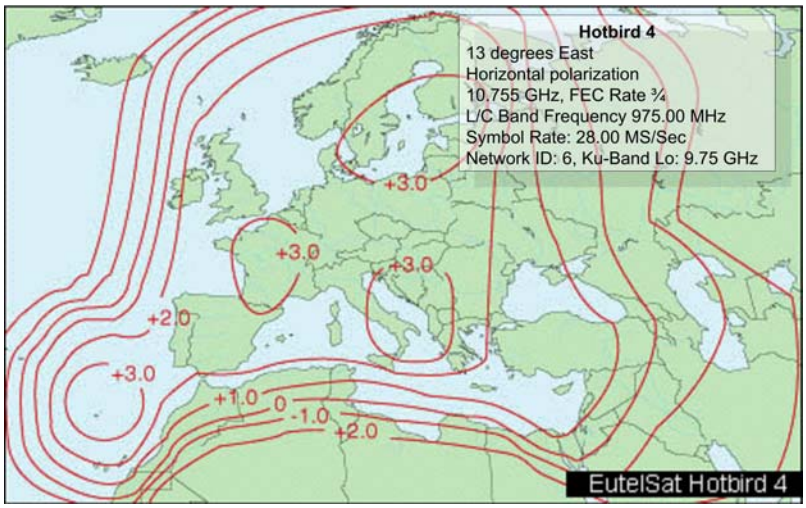


**Figure 3-7 AFNE Hotbird 4**

create a unique European version of SATNET referred to as the AFN Europe Service.

The AFN Europe Ku-band service originates at AFN-E where the signal is fed over a high-speed fiber optic data channel to a commercial satellite teleport located at Usingen, Germany. At Usingen, the AFN Europe Service is transmitted to a European Satellite (Hotbird 4) located at 13° East for broadcast to Europe and Southwest Asia. Refer to figure 3-7 for the satellite coverage area.

## *Virtual Channel Guide*

This section provides virtual channel information for the AFN Europe Service. At the present time AFN-E programs seven American Forces Network (AFN) television services that are transmitted over the SATNET C-band Service. (See Appendix A)

The AFN News channels provides 24 hour a day timely news, news features, business and military news as gathered from the major networks.

The AFN Sports channel features sporting events, sporting news, and feature sports programming.

The AFN Entertainment television services are similar to mainstream commercial television in terms of look. Each Entertainment service is programmed and scheduled to best serve a geographic audience: AFN Atlantic is programmed to suit the European audience.

The Spectrum service is made up of family oriented programming which features the best of Public Broadcasting Service, Arts & Entertainment (A&E), Discovery Channel, History Channel, and classic series and cartoons. This service is packaged into eight-hour segments that are shown three times, in a 24-hour period.

The Pentagon channel is produced by the AFRTS NewsCenter in Washington DC and provides extended coverage of many events that the major news networks may not necessarily cover in their entirety. The Pentagon Channel's current daily schedule includes live events such as Pentagon Press and Operational Briefings, Secretary of Defense town hall meetings, Central Command Press and Operational Briefings, State Department and White House briefings, Capitol Hill testimony by Defense officials and other relevant events available from the National Network Pool.

Multiple types of radio programming are available on the Ku-Band SATNET: The AFN Uninterruptible Voiceline radio service includes news, commentary, and special feature radio programming from a variety of U.S. commercial radio networks including AP, UPI, and CNN all on a 24-hour basis. The AFN Voiceline radio service offers the same news and commentary programming but breaks away to provide alternative live sports programming at various times. Approximately two to five games are provided Monday through Friday, and five to seven during the weekends. Playoff and championship series will increase this number slightly. Music radio services include jazz from National Public Radio,

adult contemporary from Westwood One Radio Networks, The Tom Joyner Morning Show featuring urban contemporary, “Jamz” urban contemporary, and Pure Gold from ABC Radio. In addition there is the mainstream country service from Westwood One Radio “country,” as well as the two AFN Europe originated radio services.

## *AFRTS Direct-To-Sailor Satellite Network (DTS)*

The AFRTS DTS satellite network is a digital video compression system capable of providing video, audio, and data programming to AFRTS viewers around the world including sailors and Marines at sea underway aboard US Navy ships and Pacific Ocean areas not serviced by the Direct to Home service in Japan and Korea. The transponders on the three international DTS satellites are supplying global, premium beam service at an effective isotropic radiated power (EIRP) level of 29.0 dBW (at beam edge). All three satellites transmit a left hand circularly polarized (LHCP) signal, but each has its own dedicated C-Band (3.7 GHz to 4.2 GHz) downlink frequency. The network operating system uses MPEG-1 video compression technology to broadcast three video channels with their associated audio, additional stereo and monaural radio channels, and a utility data channel. All of the program material for these channels originates at the AFRTS Broadcast Center (AFRTS-BC) located at March Air Reserve Base near Los Angeles, California.

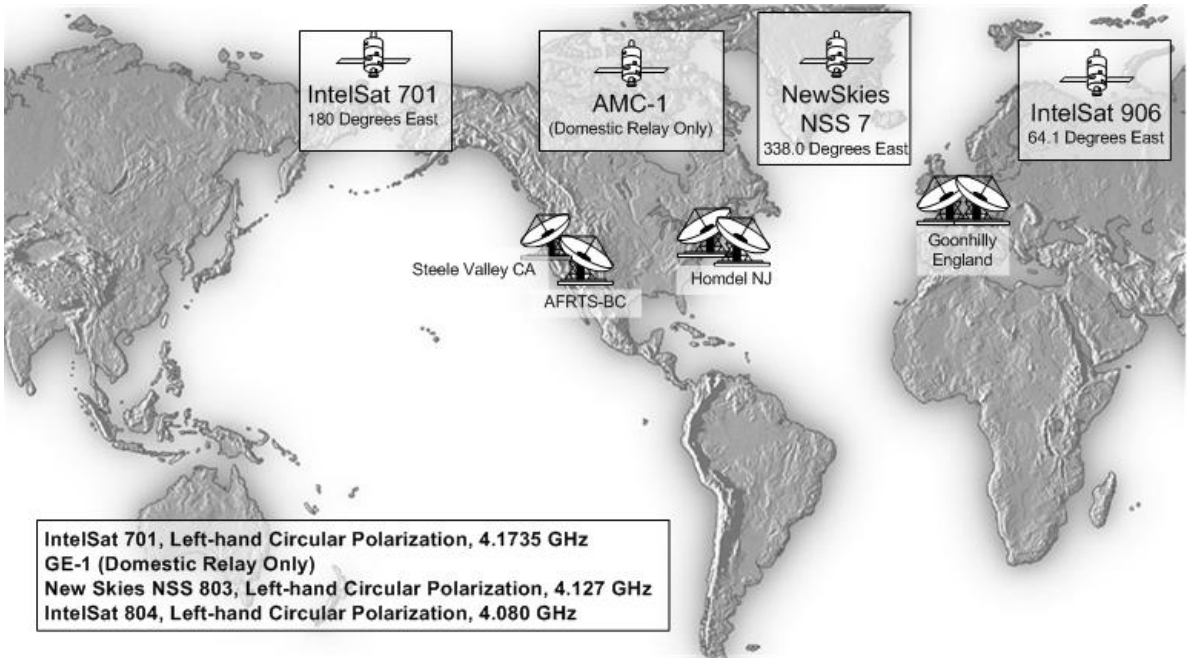


**Figure 3-8 DTS Satellite network diagram**

## *DTS Satellite Network Architecture*

AFRTS-BC compiles the television and radio programming and data from the major US television and radio networks such as ABC, CBS, CNN, FOX, and

NBC. This material is then configured into the unique DTS television, radio, and data channels that are then transmitted around the world over the AFRTS DTS satellite network. Figure 3-8 shows the overall DTS satellite network which

includes a constellation of one domestic and three international satellites

broadcasting the DTS signal to the three ocean regions: Atlantic Ocean Region (AOR), Indian Ocean Region (IOR), and Pacific Ocean Region (POR). The signal path to these satellites starts at AFRTS-BC where two independent networks are established, a DTS-POR network and a separate DTS-AOR/IOR network.

The DTS-POR signal originates at AFRTS-BC where it is transmitted by a fiber optic high capacity data channel (45 Mbps, DS-3) to the West Coast international uplink site which relays the signal to an INTELSAT satellite located over the center of the POR service area. Refer to figure 3-9 (180° Pacific Ocean Region (POR) satellite footprint map).

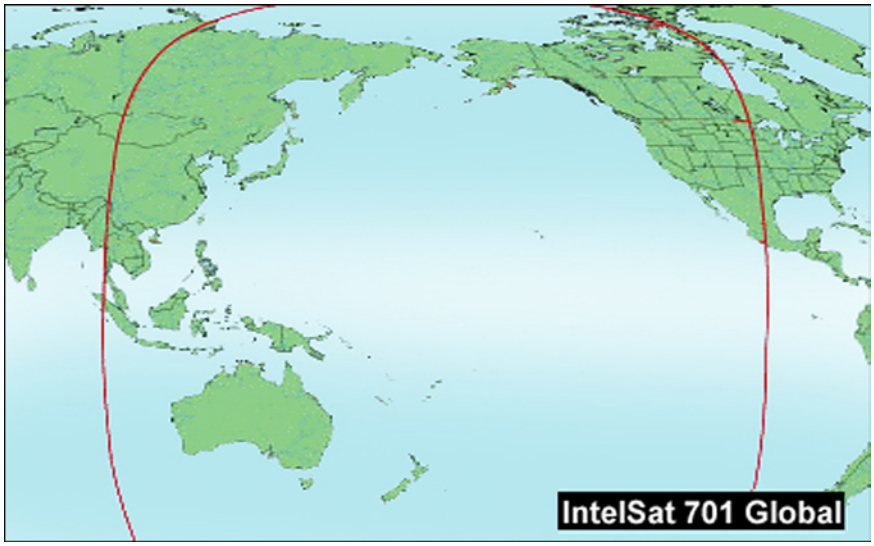


Figure 3-9 IntelSat 701 Pacific Ocean

The DTS AOR/IOR signal also originates at AFRTS-BC but unlike the POR signal is up linked directly to a domestic satellite that provides the signal to the East Coast international uplink site. The East Coast uplink site transmits to the NEW SKIES 7 satellite to provide the signal to the AOR service area (Figure 3-10). Located within the DTS-AOR service area is the European satellite relay facility at Goonhilly, UK that receives the AOR signal and relays it to another INTELSAT satellite located in the IOR service area (Figure 3-11). (**Note:** The DTS domestic satellite link was designed for connectivity purposes to very large antennas and is not useable to provide service for shipboard customers.)

Figure 3-10 New Skies NSS-7 Atlantic Ocean and Mediterranean Sea

## *Virtual Channel Guide*

This section provides channel information for the two DTS networks. Appendix A provides the virtual channel information for the all service networks.

At the present time AFRTS programs three television services that are transmitted over each of the two DTS Satellite Networks.

The AFN News channels provides 24 hour a day timely news, news features, business and military news as gathered from the major networks.

The AFN Sports channel features sporting events, sporting news, and feature sports programming.

The AFN entertainment television services are similar to mainstream commercial television in terms of look, but surpass it in terms of content, featuring the best of American television. Each entertainment service is programmed and scheduled to best serve a geographic audience. AFN Pacific is transmitted over the DTS-POR system and is timed for the Japan time zone audience; AFN Atlantic is transmitted over both the DTS-AOR and DTS-IOR systems and is scheduled for an audience in the Central European time zone.

Figure 3-11 IntelSat 906 Indian Ocean and Persian Gulf

Two types of radio programming are available on the DTS system: AFN Voiceline and AFN stereo radio channels. AFN Voiceline radio services include news, commentary, and special feature radio programming from a variety of U.S. commercial radio networks including AP, UPI, and CNN. As the name implies, the AFN Uninterruptible Voiceline offers this type of programming on a 24-hour basis. The AFN Voiceline offers same news and commentary programming but breaks away to provide alternative live sports programming. Approximately two to five games are provided Monday through Friday, and five to seven during the weekends. Playoff and championship series will increase this number slightly. The two stereo radio channels have been designed specifically for use with the DTS system. Channel one is a mix of jazz from National Public Radio, adult contemporary from Westwood One Radio Networks, The Tom Joyner Morning Show featuring urban contemporary, “Jamz” urban contemporary, and Pure Gold from ABC Radio. Channel two is a mix of mainstream country from Westwood One Radio “country,” adult rock and roll from Westwood One Radio, and Z-Rock (alternative rock) from ABC Radio.

Public affairs data products are transmitted over the DTS system using the 128 kbps utility data channel. These include *Stripes* Newspaper, *Early Bird*, *Navy News Wire Service*, and the *New York Times* Fax. Additional data products will be added as they become available.

See appendixes B and D for additional technical reference on both SATNET and DTS signals.

# Chapter 4 : Digital Satellite Downlink Reception

The AFRTS signal is a digitally compressed MPEG signal and as with any digital signal there is perfect reception or nothing at all. Tuning to an MPEG compressed digital signal, however, is a little different from tuning to a standard analog signal. Weak signals appear to be random noise; the receiver will not display any picture at all until sufficient signal is reaching the antenna. Then, once the digital threshold of the receiver/decoder is exceeded, a perfect picture will appear on the TV screen. MPEG digital reception is like a light switch; it's on or off. This is to say that a digital signal has two states, perfect (on) picture quality and reception or nothing at all (off). Furthermore, if the installer moves past the antenna's peak performance position, the picture will "freeze frame" on the last picture in its buffer memory. The IRD will not receive any further video until the antenna is repositioned to receive a signal above minimum receiver threshold. Peaking the signal improves the overhead above threshold and ensures a good picture under poor weather conditions.

## *Typical Satellite TVRO Equipment Configuration*

The typical equipment arrangements used to receive AFRTS services are provided at Figure 3-2. Specific equipment requirements for receiving AFRTS services are provided in the section titled Qualification of Satellite Terminals or Digital Reception.

## *General Satellite Concepts*

The concepts underlying satellite broadcasting are straightforward: signals beamed into space by an "uplink" dish are received by an orbiting satellite, electronically processed, re-broadcast or "down-linked" back to earth and then detected by a dish and associated electronics. A receiving station can be situated anywhere within the satellite's "footprint" (see Chapter 3, satellite footprint maps). The overwhelming strength of satellite broadcasting lies in its ability to reach an unlimited number of sites regardless of their location without the need for any physical connections.

Nearly all communication satellites designated for commercial use are positioned or "parked" in the "Clarke Belt", also known as the "geostationary" arc. The Clarke belt lies in the equatorial plane 22,300 miles above the equator. This circle around the earth is unique because in this orbit the velocity of a spacecraft matches that of the surface of the earth below. Therefore each satellite appears to remain in a fixed orbital slot in the sky above. This allows a stationary dish to be permanently aimed towards a targeted geostationary satellite.

A satellite receives the up-linked signal, lowers its frequency and re-broadcasts it to any chosen geographic area. Downlink transmit antennas can target over 40% of the earth's surface with "global" beams, can broadcast to selected countries or continents via "zone" beams, or can pinpoint smaller areas with "spot" beams. Many domestic C-band broadcast satellites direct one beam that blankets the continental U.S. and a second more localized one to the Hawaiian Islands. Ku-

band satellites, operating in the higher frequency 12 GHz range, are configured for spot beams and require smaller antennas to receive their signals.

## *The Receive Site*

At the receive site a dish reflects and concentrates as much of the very weak down-linked signal as possible to its focus where a feed channels the signals into the first electronic component, the low noise block converter (LNB). The signal is then cabled indoors to the satellite receiver and processed into a form that can be deciphered by a television, stereo or computer.

## *Radio Waves and Communications*

The transmission of extremely low power microwaves, a form of radio waves, underlies the operation of radio, conventional television, satellite broadcasting and other man-made communication devices. They are one form of more general phenomena known as electromagnetic waves that travel at the speed of light, equal to 186,000 miles per second. At this rate, a signal travels from the uplink, to a satellite and back again to earth in about 4/10ths of a second.

## *Radio Waves*

Radio waves are defined by their frequency, power and polarization. These parameters are briefly discussed below.

### Signal Frequency

The frequency of a radio wave is the number of vibrations that occur every second. Just like the frequency of sound vibrations determines whether a musical note is either a soprano or a bass, so the frequency of radio wave determines whether they are used to transmit regular AM radio broadcasts or satellite television broadcasts. Microwaves have frequencies in excess of one billion cycles per second (known as one gigahertz and abbreviated 1 GHz) to as high as 50 GHz. C and Ku-band satellite downlink signals fall in the 4 and 12 GHz range, respectively.

### Polarization

Radio waves can be polarized. Two standard formats commonly used in C and Ku-band satellite communication links are linear and circular polarity.

Linearly polarized signals can have either vertical or horizontal polarity. In this case, the electric and magnetic fields of the signal remain in the same planes in which they were originally transmitted. Horizontally polarized waves vibrate in a horizontal plane; vertically polarized waves vibrate in a vertical plane. Most C-band signals broadcast to TVROs (television receive-only) are linearly polarized.

In circularly polarized signals the electrical and magnetic fields rotate in a circular motion as they travel through space, somewhat analogous to a spiral. The direction of the rotation determines the type of circular polarization. A signal rotating in a right-hand direction is termed right-hand circular polarization (RHCP)

and a signal rotating in the left-hand direction is termed left-hand circular polarization (LHCP).

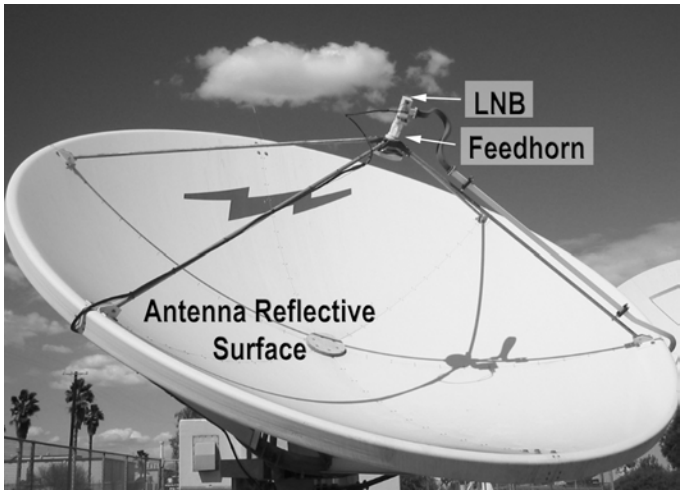


**Figure 4-1 Satellite dish parts**

A principle advantage of circular polarization is the elimination of the need for skew adjustment. A feed designed to receive a linearly polarized signal must be correctly lined up with its plane of polarization to allow reception of the highest possible power and therefore clearest picture. It requires a skew adjustment for fine-tuning. However, a feed that receives a RHCP or LHCP signal can be attached at the focal point of the dish in any orientation.

There are three noteworthy components of a satellite receive antenna which collectively capture and amplify the signal to a level large enough to break the receiver reception threshold, normally around –45dB. These are the reflective surface or parabolic curvature, the feedhorn and the amplifier section “Low Noise Amplifier (LNA), Low Noise Block converter (LNB), Low Noise Converter (LNC), and Low Noise Feedhorn (LNF). We will focus on these areas because they are the components that we personally come in contact with and have the greatest control over.

## *Antenna Reflector*

The reflective surface in a perfect world would rely on the geometric properties of its true parabolic curve to reflect the satellite signal to a very sharp focal point. The focal point on a parabolic antenna is out in front and to the center of the surface. This would be a well-defined area if a perfect parabolic curve were defined, however this isn’t as defined as we would prefer. The focal point is not as perfect as theory would dictate but is still within a small radius and is a defining difference in a perfect or marginal signal reception. This you may say is where the “rubber meets the road” and collection of the signal is critical in this area.

Reflective surfaces come in several different shapes and sizes but are most common in the parabolic or offset shape. Offset shaped antennas are nothing more than a small section of the original parabolic antenna see figure 4-2. The larger the reflective service the better defined the focal point becomes and therefore more gain can be expected. The reflector sometimes mistakenly called the antenna is the first step in a well-engineered system that will continue to provide service under harsh environments. If the size of your dish is too small for the signal you intend to capture, nothing is going to compensate for that. Working with an analog signal you could get by with a smaller dish but suffer with a noisy picture. A digital signal on the other hand is perfect or nothing situation and with a marginal or less reflective surface you can expect nothing.

**Figure 4-2 An offset satellite antenna**

Many of the small aperture Ku-band dishes sold these days use an offset antenna, see figure 4-2, a feedhorn design which places the focal point below the front and center of the dish. This type of antenna, as defined earlier is actually a small oval subsection from a much larger parabolic antenna design, is oval in shape with a minor axis (left to right) that is narrower than its major axis (top to bottom). Because of its unique geometry, the offset fed antenna requires a specially designed feedhorn, which matches the antenna geometry precisely. For this reason, the offset fed antenna and feedhorn are usually sold together as a single unit. This type of feed is called a Low Noise Feed or LNF.

## *Amplifiers "LNA/B/C/F"*

The concentrated signal from the reflective surface is channeled to a low noise amplifier that has a very low noise floor. The job for this section is to amplify the signal to a level that is above the receiver's threshold. The Low Noise Amplifier (LNA) amplifies the signal at the output of the earth station's antenna. The most commonly used LNAs use gallium arsenide field effect transistors (GaAsFETs). Typical noise temperatures of amplifiers produced today range from $15^{o}$ K to $60^{o}$ K (LNB\C\F).

The LNA is a weather sealed unit that provides enough gain to transport the signal from the antenna to the receiver. It is located as close the feedhorn as possible to minimize signal loss and thereby improving signal to noise ratio. The problem with an LNA is that the signal is in several gigahertz frequency range and requires expensive transmission lines to carry the signal from the antenna to the receiver. A much more efficient way of doing this is to down-convert the signal at the antenna to a lower frequency for transmission to the receiver. This is accomplished with the newer LNB/C/F to lower the satellite normal GHz frequencies to an L-band frequency between 940 MHz to 1450 MHz. For ease of discussion, all Low Noise Amplifier types will be referred to as a LNB, form this point forward

There is a basic tradeoff between LNB noise temperature and antenna size, which is gain, expressed by the system figure of merit G/T. Smaller antennas require a cooler LNB temperature for equivalent system performance. Whereas a larger antenna allows use of an LNB with a higher noise temperature. This should not be misunderstood and you should not be mislead that an amplifier with a lower noise temperature will correct for any antenna size. G/T is a measure of the ability of a receiving system to amplify very weak signals, such as those of a satellite transmitter 22,300 miles away over the background noise. The “G” is antenna gain and the “T” is its noise temperature. The job for the LNB is to overcome this noise figure with a carrier to noise C/N separation of greater than 8dB, see Spectrum Analyzer plots. The average for reliable reception of the AFRTS digital signal is 12dB of signal above the noise floor. It should be noted also that a digital signal reacts to noise and interference differently than a analog signal. Noise or interference introduced in a digital environment will cause pixelization and even loss of signal reception. Whereas in the analog world, received video will have noise or sparkles but in most instances would not suffer total loss of signal. The advantage of the digital signal is, there is no change in the signal quality until it deteriorates below the receiver reception threshold. But, at that point the received video will go from perfect to total loss of signal; notice there is no in between.

The noise figure or temperature, expressed in decibels or degrees Kelvin, respectively, is a measure of the degree by which this amplifier degrades or decreases the signal-to-noise ratio of the satellite signal as it passes through the device. This scale is based on the fact that at a temperature known as absolute zero, $0^{o}$ K (equal to minus $273.16^{o}$ C or minus $459.72^{o}$ F), molecular motion ceases and consequently all electronic noise disappears. The lower the noise temperature or figure, the better amplifier performance. There are amplifiers on the market today with noise temperatures as low as $15^{o}$. Getting below $15^{o}$ K, requires external cooling of the electronics and is a very expensive endeavor.

Gain is also very important in characterizing low noise amplifiers. The more common LNB gains today usually range from 60 to 70 dB. LNBs must be designed with sufficient gain to overcome cable losses as well as the effects of noise contributed within this device and overall system noise temperature.

The low noise block down converter, the LNB, detects the signal relayed from the feed, converts it to an electrical current, amplifies it and down-converts or lowers its frequency. LNBs in both analog and digital systems down-convert the signal to a band in the 950 to 1450 MHz range. The “down-converted” signal is subsequently relayed along cable to the indoor satellite receiver.

Signals reaching the input of an LNB from a typical 8-foot C-band dish have powers of less than $10^{-14}$ watts/$m^2$. Therefore, an LNB must contribute very little noise power or received satellite signals will be drowned out in the roar of amplifier internal thermal noise. This feat is made possible by advances in transistor technology. Without such progress, satellite broadcasting would not exist as we know it today.

## *LNB Performance*

There are three specifications that affect the performance of the LNB and have a direct effect on the ability of a system to satisfactorily capture a satellite signal. In order of importance for digital reception is, the noise temperature, Local Oscillator stability (L.O.), and its gain expressed in dB. The noise temperature of the amplifier must be low enough to overcome the noise floor of the antenna to a minimum of 8dB above the signal to noise floor.

## *Feedhorn Assembly*

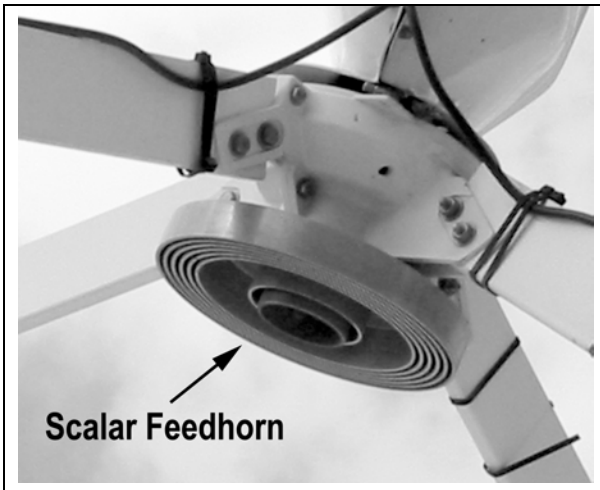


**Figure 4-3 Feedhorn assembly**

Feedhorns, as with the reflective surface also come in several different forms with the most common being the scalar feedhorn. The scalar feedhorn has a large circular plate with a series of circular rings attached to its surface, see figure 4-3. These rings collect the signal at the antennas focal point and conduct the incoming signal to the waveguide attached between the rings and the LNB. The effect of the scalar rings is to concentrate the signal in an effort to correct the imperfections of the parabolic shape. Therefore the effect of the feedhorn to focus or channel the incoming signal is critical in signal reception. Adjustment of the feedhorn will be discussed later but is a must to take advantage of the systems overall gain and therefore reducing the overall system noise floor.

The scalar feedhorn primarily sees or is illuminated by the inner portion of the antenna’s surface area, while attenuating the signal contribution from the outer portion of the dish by 8 to 22 dB, depending on whether the dish is deep or shallow in its construction. Molecular motion within the Earth itself generates random noise, which permeates the entire electromagnetic Spectrum used for

the transmission of satellite signals. This random noise is many times stronger than the satellite signals reaching any location. The attenuation or illumination taper provided by the feed sharply reduces the reception of the Earth noise which lies just beyond the antenna's rim. The outer area of the antenna's surface therefore acts more as an Earth shield for the feedhorn than as a contributor to the overall signal gain of the receiving antenna.

## *Feedhorn Adjustments*

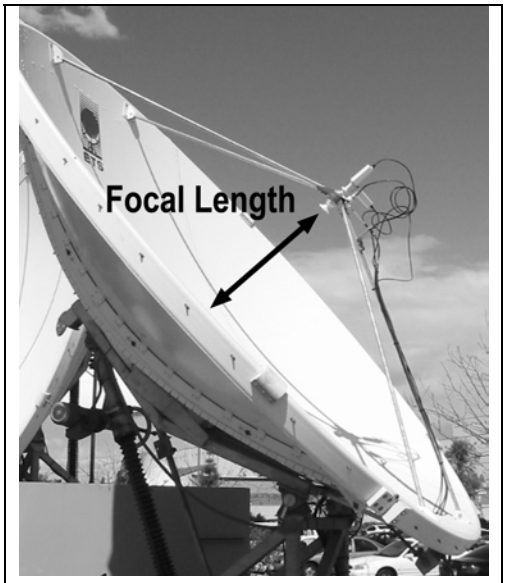


**Figure 4-4 Focal length**

Focal length between the center of the antenna surface hub and bottom of the feedhorn assembly facing the antenna surface should be initially set to the distance recommended by the antenna manufacture, see figure 4-4. Adjustments of 1/8 inch or more in or out from the recommended distance should be made while using a signal meter or Spectrum analyzer to determine the precise position required for maximum signal acquisition. This is particularly important for antennas composed of individual segments, especially those composed of mesh panels as antenna surface irregularities due to careless antenna assembly can actually shift the optimum position of the focal point from the value recommended by the antenna manufacturer.

When adjusting the feedhorn in or out, be sure that the waveguide opening remains precisely centered over the dish at all times. You can check this by measuring from the antenna's rim to the outer ring of the waveguide opening from four equidistant positions around the rim. All of these measurements should be equal.

There is an important difference in the process of aiming an analog and a digital dish. When even a faint signal is received a hint of a television picture appears with a conventional TVRO. Then fine adjustments can be made to improve reception. A digital system either acquires the signal or nothing. Therefore the aiming angles should be set as accurately as possible before powering on. Once the signal has been acquired, then the signal strength can be monitored for fine-tuning. One saving grace with small dish systems is that the beam width is so wide that aiming errors of even a degree or more will not have a major impact. While fine-tuning the digital dish monitoring the signal strength is a good indication of raw RF, but as a word of caution, don't sacrifice BER for signal strength.

## *Polarization*

There are four polarities most common to communications satellites in orbit today. These are horizontal, vertical, left and right hand polarization and your system pickup probe must be aligned accordingly for best reception. There are several different types of feeds: some will need to be manually polarized and some will not depending on the type of feedhorn used. This adjustment is best accomplished while monitoring the satellite signal on the display of a Spectrum analyzer. If a Spectrum analyzer isn't available, make this adjustment and maximize the BER of the receiver. Rotate the feedhorn until you begin to see the other polarization. Turn your receiver on and look at the BER. You will notice that it gets worse as the other polarity begins to increase. The idea is to minimize the other polarization and at the same time maximize the BER or signal quality of your receiver. If you notice that rotating the feedhorn in a 360$^{o}$ rotation makes no difference to the BER/Signal quality. This indicates that your feedhorn is not adjustable and is factory set to the polarization of the satellite transponder and no further adjustments are necessary.

## *Qualification of Satellite Terminals for Digital Reception*

The following three subsections include lists of equipment needed to receive the AFRTS signal. The boxes cover equipment for SATNET C-band, SATNET Ku-band and Television-Direct to Sailor (TV-DTS) C-band digital reception.

## *Equipment needed for SATNET C-band reception*

1. Dish Size: 4.5 meter (minimum size)
2. Mid-band Gain: 43.6 dBi
3. Feedhorn
    - 3.1. For Domestic Region (Americom 1 (AMC-1) formerly named GE-1): C-band Linear Vertical Polarization (V)
    - 3.2. For Atlantic Ocean Region: C-band Right Hand Circular Polarization (RHCP)
    - 3.3. For Pacific Ocean Region: C-band Left Hand Circular Polarization (LHCP)
4. Low Noise Block (LNB)
    - 4.1. Noise Temperature: 25° K (+ -) 5° K
    - 4.2. LO Stability: 1,000 kHz (+ -) 100 kHz
    - 4.3. Recommend using a NORSAT Model 8915
5. Cable: RG-6 or RG-11
6. L-band Splitter: <u>Caution</u> terminate all unused ports
    - 6.1. Must be diode steerable, power passing on all legs
    - 6.2. Recommend using a Channel Master 1x4 Model. 24141FD

7. L-band in Line Amplifier
    7.1. 20dB gain from .9 ~ 1.75 (GHz)
    7.2. Recommend using a DX Antenna Model ES-25
8. R.F. Connectors
    8.1. For RG-6, recommend using Anixter P/N 144017
    8.2. For RG-11, recommend using Anixter P/N 095178

## *Equipment needed for SATNET Ku-band reception*

1. Dish Size: 80 centimeters to 1.5 meter (For the size needed in your location, refer to the Hotbird 4 Satellite Footprint Map at Chapter 3, Figure 3-7.)

2. MidBand Gain: 80 CM 37.6 dBi

MidBand Gain: 1 meter 39.5 dBi

MidBand Gain: 1.2 meter 41.7 dBi

MidBand Gain: 1.8 meter 44.5 dBi

3. Feedhorn Ku-band Linear Vertical Polarization (V)

4. Low Noise Block (LNB)
    4.1. Noise Temperature: 0.6 to 0.8° dB
    4.2. LO Stability: 750 kHz (+ -) 100 kHz
    4.3. Recommend using a NORSAT Model 4708C

5. Cable: RG-6 or RG-11

6. L-band Splitter: CAUTION TERMINATE ALL UNUSED PORTS
    6.1. Must be diode steerable, power passing on all legs
    6.2. Recommend using a Channel Master 1x4 Model 24141FD

7. L-band in Line Amplifier
    7.1. 20dB gain from .9 ~ 1.75 (GHz)
    7.2. Recommend using a DX Antenna Model ES-25

8. R.F. Connectors
    8.1. For RG-6, recommend using Anixter P/N 144017
    8.2. For RG-11, recommend using Anixter P/N 095178

## *Equipment needed for Direct to Sailor (DTS) C-band reception*

1. Dish size: 1.2 meter

2. MidBand Gain: 43.6 dBi

3. Feedhorn C-band Left Hand Circular Polarization (LHC)

4. Low Noise Block (LNB)
    4.1. Noise Temperature: 20° K (+ -) 5° K
    4.2. LO Stability: 500 kHz (+ -) 100 kHz
    4.3. Recommend using a NORSAT Model 8520C
5. Cable: RG-6 or RG-11
6. L-band Splitter: CAUTION TERMINATE ALL UNUSED PORTS
    6.1. Must be diode steerable, power passing on all legs
    6.2. Recommend using a Channel Master 1x4 Model. 24141FD
7. L-band in Line Amplifier
    7.1. 20dB gain from .9 ~ 1.75 (GHz)
    7.2. Recommend using a DX Antenna Model ES-25
8. R.F. Connectors
    8.1. For RG-6, recommend using Anixter P/N 144017
    8.2. For RG-11, recommend using Anixter P/N 095178

## *Some New Terms You Should Know and Understand*

Moving into the new digital age will require a basic understanding of a few new terms that make up this new technology. The following is a brief explanation of some of the new digital acronyms and language that you will come across and need to understand.

(1) **Receiver/Decoder Threshold**: Unlike traditional analog Receiver/Decoder, where the unit continues to deliver a picture even when it is operating below the receiver/decoder threshold, digital systems will not operate below their minimum threshold. The difference being, in the analog world the picture quality will deteriorate from crystal clear, to noisy (sparkles) without total loss of picture. The digital receiver will not show signs of weakened signals and it will have a digital cliff where the signal is no longer processed and is discarded. Therefore, you cannot rate the quality of the signal by comparing it with how good the video is, it's always the same above the threshold.

(2) **Bit Rate**: This is the amount of data information being transmitted in one second of time. The total stream passing through a single satellite transponder consists of as many as ten TV services and associated audio, auxiliary audio services, conditional access data, and auxiliary data services such as teletext. The informational bit rate for this transmission may be as high as 49 mega (million) bits per second (Mb/s) over a 36 MHz satellite transponder. Single video signals within this bit stream will have a lower bit rate. For example, a VHS quality movie can be transmitted at a bit rate of 1.544 Mb/s (T-1); general entertainment

program at 3.0 Mb/s; live sports with a lot of motion at 4. or studio quality at a rate of more than 8 Mb/s.

(3**) Bit Error Rate (BER)**: Measured in exponential notation, the BER expresses the performance level of the digital receiver. For example, a lower BER of 0.0 E-6 is superior to a BER of 1.0 E-3. The lower the BER, the greater the receiver/decoder's ability to perform well during marginal reception conditions, such as during a heavy rainfall or wind gusts. Depending on which model of Scientific Atlanta Integrated Receiver Decoder (IRD) being used, the quality of the received signal is represented in BER or a signal quality scale of 1-10; 10 being the best. The 9223 will represent signal quality in BER and the 9234 set-top measures quality on a scale of 1 to 10.

## *Procedures for finding the AFRTS digital satellite signals*

The intent of this section is to aid in overcoming the difficulties of pointing a satellite antenna at an object 22,300 miles from earth. It is understood there are varying degrees of experience, so this is written as a general procedure. Take a couple of minutes to read and familiarize yourself with the content of this section before making adjustments to your system.

## *Obtaining your site Azimuth and Elevation*

Aiming a satellite antenna is basically the same principle used to aim your TV antenna, with just a few new terms to deal with. Direction to a satellite from an earth station site is typically expressed as "Azimuth", the angular amount East or West in the site horizontal plane, and "Elevation", the angular amount up from the site horizon, or the angular amount of tilt. The larger the antenna, the more critical it becomes to aim accurately, but offers more gain and therefore better signal (BER) reception. If you can't find information in appendix C regarding your site azimuth and elevation, call HQ AFRTS at commercial (703) 428-0268, DSN 328-0268 or the AFRTS-BC at commercial (909) 413-2236, DSN 348-1236.

### Step One: IRD Authorization

The first step in getting your IRD to work is to have its Tracking Identification (TID) number entered in the AFRTS Decoder Database, DSN: 348-1236, commercial 909-413-2236.

### Step Two: Finding a Clear line of Sight

(1) Two tools are required to survey your site location, a compass, and Angle Locator. If you can't locate an Angle gauge/locator see figure 4-6, "Use of Protractor".

(2) Go outside to the antenna site and hold your compass flat in your hand. Rotate the compass to get the "N" (north) and the pointer to align, see figure 4-6.

(3) Locate the tick mark on the compass that corresponds to the azimuth number for your location. Satellites are located in space above the earth's equator so you generally must aim toward the equator.

(4) Point or aim in the direction of your azimuth setting, see figure 4-6 and 4-7.

(5) Raise your arm to approximately the elevation angle, use angle gauge for reference. This is the direction and elevation of your antenna. Sight down your arm to ensure a clear path. Trees or buildings should not block your antenna; otherwise your site may not be a suitable location.

**Step Three: Connecting the Antenna and Receiver**

(1) Locate the receiver (IRD) and TV/Monitor beside the antenna for aligning purposes.

(2) Connections from receiver to antenna are made using RG-6 cable and F-type connectors. RG-59 can be used at lengths of 50ft. or less, but is not recommended. F-type connectors should be of the compression type to ensure a good shield/ground connection.

NOTE: It is extremely important and cannot be over emphasized the importance of quality cabling and connectors; this is a must. In the past B-MAC users were working with analog signals at baseband frequencies that would tolerate inferior connectors, cabling and workmanship. The move to the digital world has made us aware of the necessity for quality workmanship and the penalties paid if neglected. If ignored, expect to have problems with your system having occasional interruptions and possibly total loss of service. On the other hand, if your installation is a quality one, as it should be, the benefits are cleaner video and compact disk equivalent quality audio.

(3) Connections from the 9234 receiver to the TV/Monitor can be made using standard RCA audio and video cables or RG-59 for RF connection (see figure 4-5). Switch the LNB power located on the back of the receiver to the on position (9234). For the 9223 switch it to the 19 (left) for C-band users and to the 13/19 for Ku-band users.

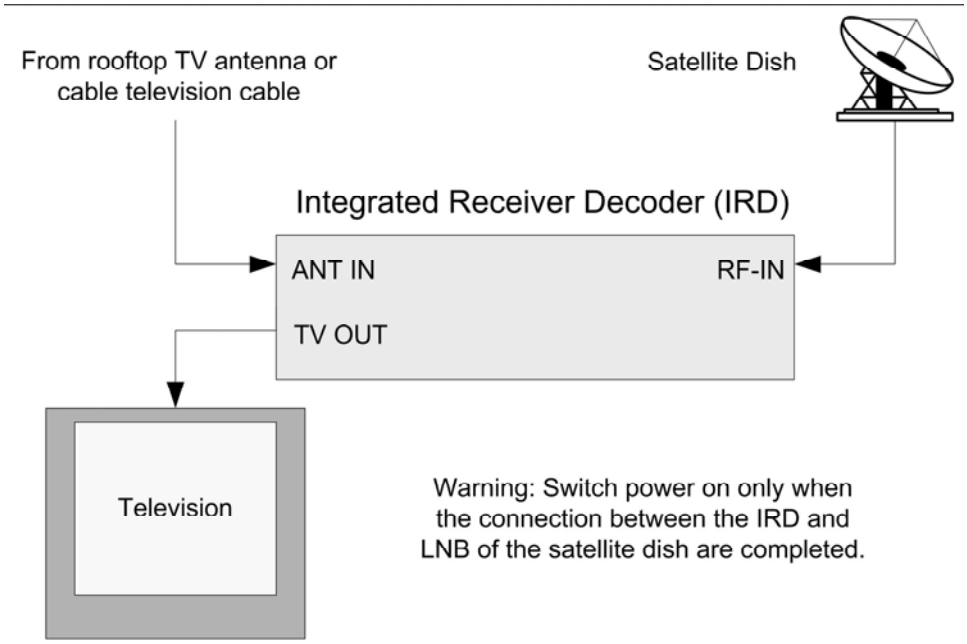


**Figure 4-5 IRD Connections**

## Initial Antenna Setup and Adjustments

(4) At this point you should have made all electrical and mechanical connections and know your azimuth and elevation settings. On most satellite antenna mounts there is a scale that will read the elevation of the antenna, set your site elevation using this scale. It is critical that the antenna be mounted perpendicular to the earth for this scale to be accurate enough to set the antenna on the correct elevation. If not, your azimuth and elevation adjustments will be off by the amount of error that's induced by the installation of the mount. Just to give you some kind of idea of the accuracy required, a one-inch movement of the lip of a 5-foot antenna results in a full degree misalignment in the antenna's direction. An error of that magnitude will certainly make the difference between an excellent signal and no reception at all. It is critical that the polar mount be plumb for you to transfer your azimuth and elevation calculations accurately to the antenna. Satellites are spaced at only two degrees apart; therefore, it is very easy to be on the wrong satellite. If you do not have an elevation scale on the antenna mount, you can buy an angle meter/gauge at hardware stores or lumber yards. If you cannot locate an angle gauge, you can make your own see figure 4-6 using a protractor.

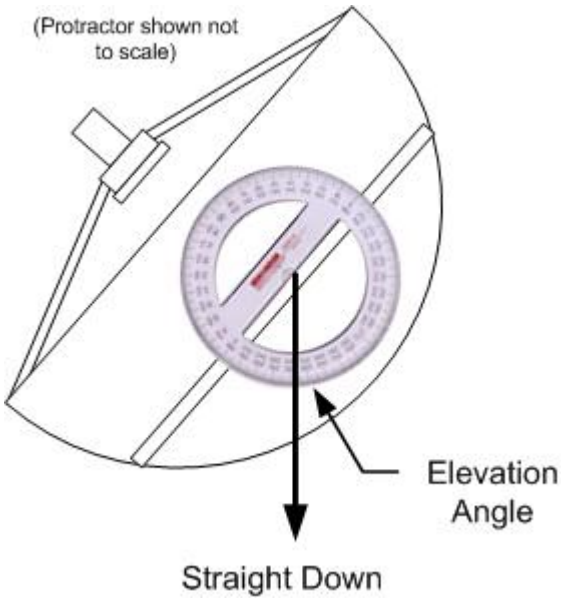


**Figure 4-6 Look angle adjustment**

This is a good time to note; if you ever see the Signal State change from No Lock to Lock + Sig, whatever you do, do not change your antenna position. The signal status will not change to Lock + Sig unless your receiver is locked to the AFRTS satellite signal. Even after you go to the main menu and the IRD will not authorize, still do not change the antenna position, you may have other problems. Slight adjustments to improve the signal are discussed in Step 5.

**Step Four: Locating the Satellite**

(1) If you haven't already done so, locate your satellite receiver and TV close to the antenna and connect as shown in figure 4-5.

(2) If you have a Spectrum Analyzer, connect it to the antenna. See Table 4-2 for details.

(3) Switch the TV/Monitor and Receiver power to the on position and tune the TV to view the receiver (IRD) menu screen.

(4) Perform decoder setup instructions found later in this chapter. Information for all regions served by SATNET and DTS can be found at the end of this chapter. It is best to begin with the IRD set at the Installer Menu for the 9223, or the Receiver Setup menu for the 9234. The green signal LED on the front of the IRD and the Signal Status menu are the first and most reliable indicators of receiving the satellite signal. It is best to use the signal status menu window for signal verification during the antenna tuning process.

(5) Select the Installer Menu on the 9223 or the Receiver Setup Menu on the 9234.

(6) Set the elevation on your antenna using the scale located on the back of the antenna. If your antenna doesn't have a scale see figure 4-6. Note: when adjusting the elevation angle of an offset dish, subtract the manufacture's offset angle from the elevation angle provided for reference. Most offset dish manufacturers supply a gauge on the antenna mount that automatically makes this correction for you.

(7) If necessary, loosen the nuts on the antenna support so that the antenna can rotate easily left and right.

(8) Hold the compass flat in the palm of your hand away from the antenna and any large metal object.

(9) Rotate the compass so that the “N” (North) is under the dark point of the compass pointer or arrowhead, see figure 4-7.Your compass is now aligned with the north and the tick marks around the edge of the compass represents azimuth degrees.

(10) Locate the tick mark on the compass that corresponds to the azimuth number for your site location.

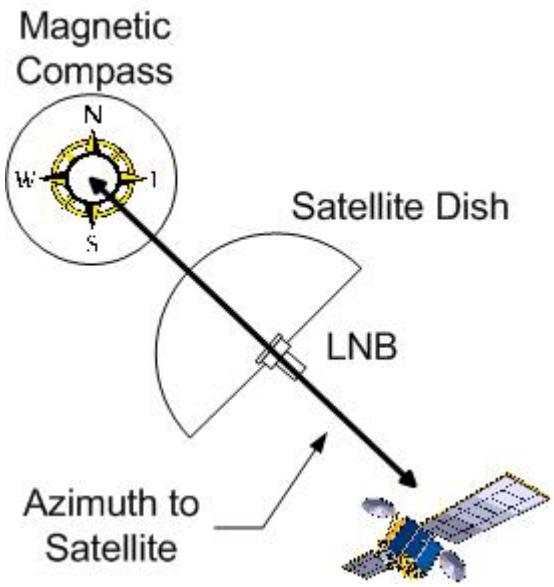


**Figure 4-7 Azimuth setting**

(11) Point the antenna in the direction of your azimuth heading, use the LNB as your pointer. Try to make this adjustment as accurately as you possibly can. It usually helps to pick an object that is several hundred feet away from your antenna that aligns with the antenna mounting pole and your azimuth heading, see figure 4-7.

(12) After making azimuth adjustments, to prevent the antenna from moving, lightly tighten those bolts down.

If you are lucky enough to have a locked signal at this point, exit from the Installer/Receiver Setup Menu to the main menu and set the IRD to a known video channel. The IRD will not authorize immediately, so give it a couple of minutes to do so. If after a couple of minutes the IRD does not authorize, check the customer settings in Table 4-3 for your region and see related chapters for troubleshooting the receiver (IRD). As indicated above, Lock + Sig is proof that your antenna is locked on the satellite. All other problems are associated with the IRD setup or authorization in the AFRTS database.

**Step Five: Peaking the Antenna**

(1) Perform this procedure only after getting Lock + Sig in the Installer or Receiver Setup menu. If no Lock + Sig go to Step Seven.

(2) Mark your antenna’s azimuth and elevation settings with a marker for reference. This is done as precaution, just in case you totally loose the signal during the fine tuning phase.

(3) Tilt the antenna forward and backward (elevation) and set for maximum “Signal Level” and “BER/Signal Quality” levels. Signal Quality or BER is the most important to maximize. Remember, BER of 0.0 E-2 is bad and 0.0 E-6 is perfect, and Signal Quality 1-10, with 10 being the best.

(4) Do the same for azimuth, left and right.

(5) Repeat steps 2 and 3 at least two times each.

(6) Bolt the system down to prevent movement.

**Step Six: Troubleshooting**

If the Signal State is not displaying Lock + Sig do the following:

(1) Check to see if the LNB Power is set to the ON position for a 9234. For a 9223, the IRD has three Power positions: 19, OFF, and 13/19 Volt positions, do the following, for C-band users set it to the 19 Volt position, for Ku-band users set it to the 13/19 Volt position.

(2) Also, ensure your antenna is polarized correctly for the signal you intend to receive. Note: For Ku-band users the receiver voltage can switch the antenna polarization from vertical to horizontal within the receiver setup menu (13 Vertical-19 Horizontal).

(3) If this was your problem, the green signal light on front of the IRD will illuminate. Go to the Receiver Setup or Installer Menu and check to see if the No Signal state has change to Sig+Lock.

(4) If you have Sig+Lock, go back to Step 6 and following those instructions.

(5) If this was not your problem, it is time again to check the antenna position; perform the following:

a) If you have a Spectrum Analyzer connect it per directions in Table 4-1.

b) (b) For those that do not have the luxury of test equipment, position your TV and IRD so you can work on the antenna and monitor the receiver status at the same time.

c) I Check the azimuth and elevation and reposition as needed. Use very small movements up/down, left/right. Remember that small adjustments will move you among satellites. If the signal level increases significantly with No lock + Signal, you are on the wrong satellite or the setup parameters are wrong.

d) (d) Remember at any time during the following procedures you get a locked signal (Lock+Sig) stop and mark the antenna's azimuth and elevation positions. If yes go back to "Peaking the Antenna" if no proceed to next step (10).

e) (e) The following is a slow process but will result in aligning your antenna.

f) (f) Loosen antenna-mounting bolts so that you can move the antenna's azimuth (East and West).

g) (g) While monitoring the Signal State (No Lock) slowly move the antenna from East to West. Again, if the signal state ever changes to Lock+Sig, stop and lock the antenna in that position and perform "Peaking the Antenna".

h) This is a long and time-consuming process to follow and adjustments must be made in slow, small increments. Reset the antenna's elevation

by repositioning by less than one degree, tilting it in ½ inch increments, locking it down and repeating step 12 (move slowly, east to west).

i) Repeat Step 12 and 13 until you have a LOCKED (Lock+Sig) signal.

(j) Once you obtain a locked signal, mark the antenna's azimuth and elevation with a permanent marker for future reference.

(k) After getting a LOCKED signal reposition the antenna's azimuth and elevation to maximize the signal level, BER, and Signal Quality. Note: Set the 9234 for the best signal quality (1-10, 10 being the best) and set the 9223 for the best BER (E-2 is bad and E-6 being the best). Also, see "Peaking the Antenna".

(l) Go back to "IRD Displays Sig+Lock" and perform that procedure; also see the "Antenna Peaking" section.

| **Table 4-1 Spectrum Analyzer Setup** |
|---|
| 1. Connect the input of the Spectrum analyzer with a T-Connector between the LNB and the receiver. Caution: This will put 13-19 Volts DC on the input of the Spectrum Analyzer and could damage it. To prevent this from happening use a DC blocker on the input of the analyzer while still feeding the LNB with the required receiver DC voltage. Also, see Spectrum Plot for the Signal you intend to capture. |
| 2. Set the Frequency to satellite L-band Frequency-should be between 950 MHz. And 1450 MHz. |
| 3. Span to 100 MHz. |
| 4. Amplitude to –45 dB |
| 5. Vertical Scale to 1 dB per scale. If signal is out of Range Adjust Accordingly |

| **Table 4-2 Typical Satellite Receiver Setup** | |
|---|---|
| **9234** | **9223** |
| a. Freq. Mode | a. Band |
| b. Frequency | b. L-band Freq |
| c. Polarization | c. Polarization |
| d. FEC Rate | d. FEC Rate |
| e. Symbol Rate | e. Symbol Rate |
| f. L.O. Freq | f. L.O. Freq |
| g. Video Standard (NTSC) | g. Video Standard (NTSC) |

| Table 4-3 Bit Error Rate to Threshold Margin Table | | |
|---|---|---|
| **Bit Error Rate Reading** | **SatNet FEC ¾** | **DTS FEC 2/3** |
| 2.00E-02 | -- | 0.22 |
| 1.00E-02 | 0.36 | 1.44 |
| 5.00-03 | 1.36 | 2.36 |
| 2.00-03 | 2.38 | 3.36 |
| 1.00E-03 | 3.12 | 4.10 |
| 5.00E-04 | 3.78 | 4.76 |
| 2.00E-04 | 4.56 | 5.54 |
| 1.00E-04 | 5.08 | 6.10 |
| 5.00E-05 | 5.58 | 6.60 |
| 2.00E-05 | 6.14 | 7.12 |
| 1.00E-05 | 6.50 | 7.48 |
| 5.00E-06 | 6.78 | 7.78 |
| 2.00E-06 | 7.18 | 8.18 |
| 1.00E-06 | 7.42 | 8.46 |

**Note**: The information shown is the amount of margin, in dB, over the DVB specification threshold for a given BER display. For example, a BER reading of 5.00E – 04 on a SATNET decoder provides 3.78 dB of margin over the Eb/No threshold of 5.5 dB or a total Eb/No of 9.28 dB. At the same BER, DTS provides 4.76 dB of margin over the Eb/No threshold of 5.0 dB for a total Eb/No of 9.76 dB.

Scientific Atlanta developed the table from actual testing of decoders over a range of symbol rates. The standard deviation is 0.2 dB.

## *Sun Outages*

A sun outage is similar in behavior to a rain fade. The high energy level and broadband nature of the sun's energy can overpower a satellites downlink signal and effectively wash out a receive signal with noise. This problem is technically impossible to overcome at this time.

Due to the angle of the sun in relationship to the satellite, a sun outage is actually a mixture of degraded receive performance with the possibility of a circuit outage. A circuit outage might be typically 20% of the total predicted sun outage duration period. Many factors influence how robust a receive circuit may be, therefore it is extremely difficult to predict exactly how long an outage might possibly be. The digital nature of the AFRTS signal means that you'll either have very good signal or none at all with very short periods of degraded "pixilated" signal.

At certain times of year, approximately one month either side of the spring and autumn equinoxes, there may be a conjunction of the sun and satellite positions. Depending upon the size of the earth station antenna, such events can lead to a serious impairment of the space-earth link.

The outages typically last only a few minutes at a time once a day with a normal worse case outage of about ten to fifteen minutes. Outages will affect each link in multi-hop circuits. For example viewers in Europe or the Indian Ocean area would be affected by an outage of first, the Atlantic satellite and then secondly, of the actual satellite feeding their antenna.

Antennas should not be adjusted or re-pointed at these lost-of-signal times. The viewer should wait out the outage until the sun finishes passing directly behind the satellite.

## *RF Interference In Digital Networks*

The transmission of digitally compressed video over satellite allows many high quality video signals to be transmitted in a satellite transponder, which formerly could accommodate only a single high quality video signal. The "compression" of these services into a narrow bandwidth causes some inevitable trade-offs in the complexity of both the transmit and receive earth stations. Transmit earth stations must be equipped with tremendously complex video "encoders" which digitize and compress the large amounts of video and audio information into a much smaller bandwidth. Receive earth stations must be compatible with the reception of a wide band digital carrier. While most Television / Receive-Only (TVRO) earth stations are compatible with the digital video technology, some will be susceptible to Radio Frequency Interference (RFI), sources which were not significant with analog video transmissions.

In the traditional analog world, interference was spread across a much broader information base where individual elements of information were less critical. With digital compression, much more information is transmitted in a compressed format, which increase the importance of each "Information packet". Digital compression signals react differently to problems caused by RF Interference in

the RF (Radio Frequency) path as compared with traditional analog video signals. Where RF Interference caused either a white line, sparkle or “hum” bar in the Analog video realm, in the digital domain it can result in digital artifacts such as “blocking”’ and/or a “black screen” or “freeze frames” depending upon the magnitude and duration of the interference and the concealment algorithms used.

TVRO sites experiencing RFI do not always experience any observable effects. A typical transponder operating with a compressed digital video signal may contain up to 8 television programs. Although one might expect each of these signals to be 8 times as susceptible to RFI as a traditional analog signal; in practice the signals are of a higher quality (for a given antenna size) than traditional analog transmission due to the sophisticated error correction and concealment algorithms employed.

Much has been learned about the cause and mechanics of many external interfering sources that enter through the antenna and associated subsystems. This paper will help identity potential origins of RF Interference in addition to providing methods of reducing the effects of interference on the satellite carrier. While it is impossible to eliminate RFI, there are ways in which to both reduce the level of interference and conceal the event so that it has the least amount of perceived effect on the video.

We will address two major interference scenarios, which may be caused by a number of ground-based sources. These sources and their method of interaction with a typical receive terminal are explained. Several methods of reducing the interference and its effects are also explored.

The two types of RFI encountered are Destructive Interference (DI) and Out of Band Interference (OBI). Destructive interference is encountered when the desired receive signal is completely overwhelmed, or disrupted, by an interfering signal (or noise source) in the channel of the desired signal, and at a level equal to or greater than the desired signal. Out of Band Interference is defined as a signal (or noise source) which does not interact directly with the desired signal, but interacts with other components of the receive system such that the desired signal is impaired or destroyed. Both DI and OBI may originate from the same sources. An interfering carrier from a terrestrial microwave system may act as DI on a carrier at one frequency, and an OBI on carrier at another frequency at the same TVRO site.

## *Current Technology*

Digital video compression receivers differs from traditional FM video receivers in that they receive video and audio signals that are digitized, compressed and modulated using Quadrature Phase Shift Keyed (QPSK) digital modulation. This technique allows the transmission and reception of several high quality video channels and associated audio in a 36MHz transponder. In comparison, traditional analog FM modulation provides only one video and its associated audio signals to be transmitted per transponder.

## *Error Correction*

Because of the increased capacity attained using digital compression and transmission, special error protection is used to either correct errors or provide concealment when the error rate exceeds the capability for the decoder to provide complete correction. To detect and correct errors caused by thermal noise, a technique called soft decision convolutional decoding is used. The IRD and associated up-link equipment use a convolutional encoder to provide error correction to thermal noise down to about 7 dB C/N. Also, to protect against burst noise interference, a special data interleave and Reed Solomon block decoder are used. The combination provides error correction to burst interference outages that can be caused by engine ignition noise, industrial microwave oven interference, and adjacent band interference from such sources as aircraft radar altimeters.

Because there may be instances when the error rate is high enough so that not all errors can be corrected, the IRD contains sophisticated software algorithms that provide image concealment for small-uncorrected errors, and either freeze frames or black-frame substitution for larger uncorrected errors.

The FM Analog equivalent to digital errors is the well-known “white line” or “sparkles that appears on the TV screen when the received signal level drops below the FM threshold of about 10dB C/N. Unlike analog transmission where the “white lines” or “sparkles” are superimposed on the video, uncorrected digital errors can create a loss of digital synchronization resulting in outages that can last longer than the actual duration of the interference. It is during these instances that image concealment is important Typically, instead of a single “white fine” or “sparkle”, a digital error can result in the generation of artifacts ranging from ”no perceptible error” to “multiple block errors” that look like FM threshold sparkles to “freeze frames” or “black screens” for really significant errors.

## *Reacquisition*

Improvements in technology against terrestrial interference focus on two primary areas, reacquisition of the carrier, and concealment. Reacquisition deals with the time it takes to reacquire the carrier, decode and restore video after an RFI “hit” takes place. Reduction of the reacquisition time to its lowest value is the objective in any design consideration.

## *Concealment*

Concealment deals with the methods employed in the IRD as it relates to video presented to the viewing audience during the reacquisition period. Various approaches can be employed, use of a “black screen”, displaying digital artifacts, or freezing the video frame are all methods that can be used to display video during the reacquisition sequence.

## *Sources of Interference*

There are a variety of sources of interference, which can affect a digital compression path. Identification of the interfering source is an important step in the goal of reducing the effects of RF interference on the desired signal.

Interference can have two effects on a digital carrier:

1) Compression or saturation of the RF receiving equipment including LNA's, LNB's, line amplifiers, and RF Tuner inside the IRD.
2) Direct corruption of the digital carrier.

There are three areas, which need to be addressed in protecting the digital carrier against interfering sources:

1. Protection from saturation or compression in the RF path
2. Error correction and reacquisition of the digital carrier
3. Concealment with regard to the source material displayed to the viewing audience.

The following section details the potential sources of RF Interference.

### Terrestrial Microwave Interference

Much of the world's populated areas are utilizing terrestrial microwave signals. These signals range from typically 2 GHz to 15 GHz with a major concentration in the 3.1 GHz to 4.99 GHz band. Terrestrial microwave transmitter/antennas will be located at or near places of commerce, metropolitan areas, near airports, or large industrial facilities. Microwave repeaters may be found at intermediate points *in* the path throughout populated and often times unpopulated regions.

Most terrestrial microwave interference manifests itself as a single modulated or unmodulated carrier, and are readily observable in the C-band pass band of the system with a Spectrum analyzer. A site survey should be performed prior to final location of the earth station to ensure that terrestrial microwave carriers will not be a problem. Microwave interference may require relocation of the satellite-receiving antenna into a "clear" path. Should the presence of these carriers be detected prior to site location, they can be treated as part of the satellite link analysis to evaluate their affect on performance.

### Impulse and Ignition Noise

A digitally compressed video signal can be susceptible to interference from impulse generators. Some typical sources of impulse noise are power equipment (power generators) or ignition noise from engines (vehicles, motorcycles, mopeds, lawn mowers, power blowers). Spark emissions cover a wide band of RF frequencies including C-band and can enter through the satellite dish and LNB. These emissions can originate from engines where broken, intermittent or "arcing" spark plug cables are used. Ignition wires are typically resistive wires that dampen RF radiation, however a broken or intermittent ignition wires can arc and emit excessive radio interference. Ignition "burst noise" can last in excess of

1 millisecond, exceeding the interleave depth of the error correction system designed into the IRD and can have a power level 40 dB higher than the satellite carrier. The repetition rates greater than once every 70 millisecond have been detected.

When planning an earth station you should site the station well away from sources of ignition interference such as busy roads, highways, intersections, or car parks. You may want to restrict the use of gasoline-powered lawn mowers and other combustion engines during peak usage hours.

Because ignition noise represents broadband interference an operator experiencing ignition noise should address both the issue of saturation as well as attempt to reduce the magnitude of the interfering source. To address saturation, attenuators should be utilized both at C-band (if used) and L-band. An interfering carrier from a automobile ignition can be more than 40 dB higher than the receiving signal and saturate LNB's, line amplifiers and the RF tuner in the satellite receiver. Severe ignition noise problems can be addressed by relocation of the receiving antenna, use of an "earth berms", or installation of an RFI grounded fence between the interfering sources and the earth station antenna.

### Aircraft Radar Altimeters/Airport Ground Radar

If your downlink antenna is located near an airport or flight path your system can pick up interfering carriers from aircraft radar altimeters. The radar altimeter Spectrum is 4.200 to 4.400 GHz. This corresponds to 750 to 950 MHz at the L-band output of the LNB. These carriers have been measured in excess of +40dBc relative to the desired satellite carrier. This kind of interference often results in the saturation of any line amplifiers to the extent that the amplitude of the desired Spectrum is reduced below a measurable level. The effects of this interference may last several seconds until the aircraft passes out of the earth station antenna beam. The interference appears as a chirp or energy spread over the indicated Spectrum. It is first observed as a low level signal and gradually builds to its maximum level before gradually diminishing.

These interfering carriers are usually out-of-band and can be dealt with by installing a C-band block filter that can be specifically manufactured for greater protection at the aircraft radar frequency.

Other potential sources of interference from airports are ground looking radar that can saturate LNA/LNB's. Frequency coordination in some countries allow for adjacent bands to be utilized where they can cause out-of-band interference. Once again, C-band band pass or block filters remain an effective means of controlling the interfering carrier.

### Ship-board Radar

Another potential source of interference in coastal areas is shipboard naval radar. Usually, this on-board radar is not supposed to be utilized within a radius of the shore, however, there are documented cases where this radar has been "turned on" with deleterious effects to the local coastal viewing audience.

### Commercial Microwave Ovens

Commercial microwave ovens operating in fast-food chains and earth station lunchrooms are potential sources of interference. Emissions levels allowed by a microwave oven can be as much as 20 dB higher than a C-band satellite carrier, however, microwave oven manufactures are normally required to replace units that are known to interfere with commercial broadcast systems. A typical operating frequency for a microwave oven is 2250 MHz with a considerable amount of wide band noise generated in the 3900 MHz to 4500 MHz range. This noise can become more apparent over the life of the magnetron and can be prevalent near the end of its useful life.

### Walkie-Talkies

Walkie-talkies have been observed to interfere with the operation of IRDs. Operating a walkie-talkie in the vicinity of the IRD can interfere with the operation of the IRD. Restricted use of walkie-talkies is recommended in the vicinity of a downlink earth station.

### Personal Communications Systems

Although Personal Communication Systems (PCS) have not yet been deployed, they are being allocated operating bands that may directly interfere with the L-band input to an IRD. The International PCS band ranges from 1.7 to 2.3 GHz. It is envisioned that the hand held units will operate with power levels of fractional watts. The typical received satellite carrier level at the IRD input is in the range of –45dBm. Thus, the PCS transmitter could result in an interfering signal in the range of 30dB greater than the desired carrier. The activation of a PCS hand held unit near the IRD may generate unacceptable destructive or out of band interference which may enter the IRD through poorly shielded cabling or improperly terminated dividers and connectors.

### Random RFI (Fluorescent and Sodium Vapor Lamps, Lightning)

Particularly on start-up, fluorescent lamps can flicker causing an interfering source to an earth station antenna nearby. Another potential source is sodium vapor lamps when in a “failed” condition. Lightning is another known source of RFI that can effectively wipeout both digital and analog carriers. Though these sources are not a common occurrence, they should be mentioned in the investigation of a RFI occurrence.

## *Protection from Interference*

### Selecting a site

Site selection is the most important pro-active stop an earth station operator can take in prevention of terrestrial interference. Busy roads and highways, parking lots, power generators, and power equipment near the receiving antenna are all potential sources of interference. Sites located near airports may need special consideration due to aircraft radar altimeters.

### Saturation and Compression

Many traditional earth station operators in the analog environment are concerned with obtaining the highest signal level possible for their analog receiving equipment High signal levels in the digital environment can be problematic where terrestrial interference is present

Ignition noise is a common problem where saturation can occur in the RF path. Interfering carriers can potentially be 40 dB higher than the satellite carrier resulting in compression of the RF subsystems.

Optimizing signal levels through the use of C-band and L-band attenuator pads to increase the “headroom” of the system where RFI is found can dramatically improve performance of the receiving equipment. Installation of 6dB and 10dB pads in front of line amplifiers, block down converters, and video receiver/decoders can provide the additional “headroom” needed to prevent saturation during a RFI hit. Operating IRD’s in a “low gain” mode is another useful way to add additional “headroom” for RFI “hits”.

Many earth station operators utilize line amplifiers in traditional analog systems, which can aggravate the effect of RFI and compression. Signals that are spiked due to RFI in combination with a high gain line amplifier can saturate downstream block down converters and RF tuners inside the IRD. Optimization of the RF path, including line amplifiers is necessary when combating RFI.

### Out-of-band Filtering

For sites experiencing aircraft radar or out-of-band interference, C-band filtering in front of the LNA/LNB is an effective way to protect from interfering carriers. Special notch filters have been made for aircraft radar that are effective in those specific locations near airports or aircraft approaches.

### RFI (Radio Frequency Interference) Fencing

Special RFI fencing can often reduce the source of interfering carriers or ignition noise where it is present Wire fences of the proper diameter, located between the interfering source and the earth station antenna can be an effective way of dealing with terrestrial interference. Fences that can be utilized for RFI protection can be as simple as fine wire mesh of galvanized steel, property grounded that roughly meets the desired dimensions of 1/10 wavelength beyond cutoff of the C-band carrier. It is important to install the fence at the proper height and distance from the earth station antenna, with special attention being paid to the construction, (galvanized steel is preferred).

A wire mesh fence, property constructed, will scatter-back and absorb the energy and appear to the interfering signal much like a solid sheet of metal. The optimum dimension for the mesh fencing is a mesh size smaller than 1.27cm, (1/2 inch), which offers adequate protection at C-band.

To block ignition impulse noise from a busy street or parking lot, a galvanized steel fence with a mesh size smaller than 1.27cm (1/2 inch), should be grounded with copper grounding rods or chemical ground system. The wire fence in

combination with the ground system should accommodate a wide variation of RF emissions generated from engine ignition systems. Effective fences that have also been utilized in the past are fine wire mesh and solid thin sheet metal barriers.

### Earth Berms

A more drastic but very effective manner to protect from terrestrial interference is the use of earth berms. Placing the antenna below ground level, while more costly and not always practical, it still provides an excellent manner in which to protect the integrity of the receiving signal from RFI.

When constructing a “earth berms” careful considerations should be given to the side lobes of the antenna since the noise temperature of the earth is much higher than that of the dark sky. The surrounding earth in the earth berms may cause a noise figure degradation if it is not significantly outside of the antenna side lobe.

## *Summary*

Digital Video Compression systems will continue to be the choice for future satellite video broadcasting because of the bandwidth efficiency and unsurpassed video quality. The traditional FM analog approach to earth station operation will enter a new era with the advent of video compression. Many video earth station operators are learning the same sensitivities to RFI as the traditional digital common carriers (IDR) networks used in the telecommunications industry. Through education of earth station operators, adaptation to the environment, and advances in technology, digital compression systems will become the standard in satellite video broadcast delivery throughout the world. Education and understanding of the effects of terrestrial interference, and its prevention, are the most important steps in achieving the high standard of service demanded by subscribers in the worldwide marketplace.

## *Decoder Setup Instructions Scientific Atlanta PowerVu (Model 9223)*

1) Unpack the receiver-decoder from the shipping box and install either in a rack or on a tabletop. Warning: if installed on a tabletop, do not stack units on top of each other, as heat buildup will cause the units to fail. Allow a minimum of 2 inches of air space between receivers in racks.

2. Connect the L-band RF output from your LNB to the IRD RF IN connection.

3. Turn the LNB power switch located on the rear of the IRD to the 19V DC setting.

4. Connect a video cable from the Video Out connector on the rear of the IRD to the Video input on the rear of the TV monitor. Connect audio cables from the L-R Audio Output connectors on the rear of the IRD to L-R Audio Input connectors on the rear of the TV Monitor.

5. Connect the IRD to the AC power source. A green dot will appear in the center of the front panel display window. Push the on/off switch, located on the front lower left of the IRD, to turn the IRD on. Select Channel 0.

6. On the front panel keypad, press MENU.

7. Press 2, to unlock the installer MENU.

8. Press 9 to bring up the first page of the installer MENU.

NOTE: The INSTALLER MENU consists of two pages of selectable settings for transponder frequency and other vital decoder specific parameters including a preset frequency plan. You can exit this menu at any time by pressing VIEW.

9. Press CHAN UP/DN on the front left portion of the IRD to change the Band setting to appropriate setting for your satellite region. (See PowerVu setup information in appendix D of this document).

10. Press NEXT on the front keypad to select L/C-band Freq setting on the menu screen. Using the keypad enter the correct L/C-band frequency setting for your satellite region. (Refer to appendix D)

11. Scroll to the Polarization block, push the SELECT button to enter H (fixed).

12. Press NEXT to move the arrow down to the FEC RATE. Using the channel up/down keys enter the correct FEC RATE for your satellite region. SatNet users should select ¾ and DTS users should select 2/3.
13. Press NEXT to select SYMBOL RATE. Using the keypad enter the correct SYMBOL RATE for your satellite region. (Refer to appendix D)
14. Press YES on the front keypad section and note the system will respond that it is saving the entries in the upper right of the TV monitor. NOTE: Failure to save entries will result in the system reverting to the factory default settings and the IRD will not authorize.
15. Double check the changes you made to page 1 of the installer MENU comparing the settings with those listed in the PowerVu setup data for your satellite region.
16. Press USER to select page 2.
17. Press NEXT to select NETWORK ID.
18. Using the keypad enter the NETWORK ID for your satellite region. (Refer to appendix D)
19. Press YES to save the changes.
20. Press USER to return to page 1, at this time the word LOCKED should appear next to the bit error rate line.
21. Press VIEW to return to channel 0.
22. Press CHANNEL UP/DN to toggle through each available channel. Then press the standBy switch once. If your system requires a software upgrade, it will begin automatically. Allow the system to totally download the updated software. (Download procedure could take up to 30 minutes) Once the download is complete the decoder will return to normal operation on the last channel that was selected prior to beginning the download.

**Important note**: all C-band LNB's have a local oscillator (L.O.) frequency of 5.150 GHz but Ku-band LNB's may come in many different frequencies typically 9.750 to 12.75 GHz. This means that if you're attempting to watch a Ku-band service you need to set the decoder's frequency using a bit of simple math. The formula to set the Ku-Low/Single L.O. frequency on the AFRTS decoder is the downlink frequency minus the L.O. frequency. As an example the downlink frequency for the IntelSat 802 satellite serving the Japan and Korea Direct to Home service area is 11.6380 GHz. An LNB with a local oscillator frequency of 10.000 GHz would give a Ku Low/Single L.O. frequency of 1638 MHz (1.638 GHz) by working the math problem 11.16380 – 10.000 = 1.638. The Ku-band satellite serving the European service area is HotBird 4 at 13 degrees east and it has a downlink frequency of 10.775 GHz. Connecting an LNB with a local oscillator frequency of 9.750 would result in a receiver frequency of 1025 MHz (10.775 – 9.750 = 1.025 GHz which is 1025 MHz).

## *Decoder Setup Instructions Scientific Atlanta PowerVu (Model 9234)*

The following are quick set-up instructions for Scientific-Atlanta's Integrated Receiver Decoder (IRD), Model #9234 (hereafter referred to as an IRD).

SET UP INSTRUCTIONS:

1. Unpack the IRD from the shipping box and install either on a desktop or on top of TV receiver. Do **not** plug the IRD into the power outlet yet.
2. Connect the L-band RF output from your satellite dishes LNB to the IRD's RF IN connection.
3. Turn the LNB power switch located on the rear of the IRD to ON.
4. If you are using a TV Monitor (a TV <u>without</u> ability to change channels), connect a video cable from the Video Out connector on the rear of the IRD to the Video input on the rear of the TV monitor. Connect audio cables from the L-R Audio Output connectors on the rear of the IRD to L-R Audio Input connectors on the rear of the TV Monitor.
5. If you are using a TV Receiver (a TV <u>with</u> ability to change channels), connect a coaxial cable from the TV Out connector on the rear of the IRD to the VHF input on the TV. Select either TV channel 3 or 4 on the rear of the IRD and select that channel on your TV.
6. Connect the IRD to a power source. Push the on/standby switch, located on the front lower left of the IRD, to turn the IRD on.
7. Using the remote control, display the BSR MAIN MENU by pressing the Menu button. See Figure 4-8 for example.

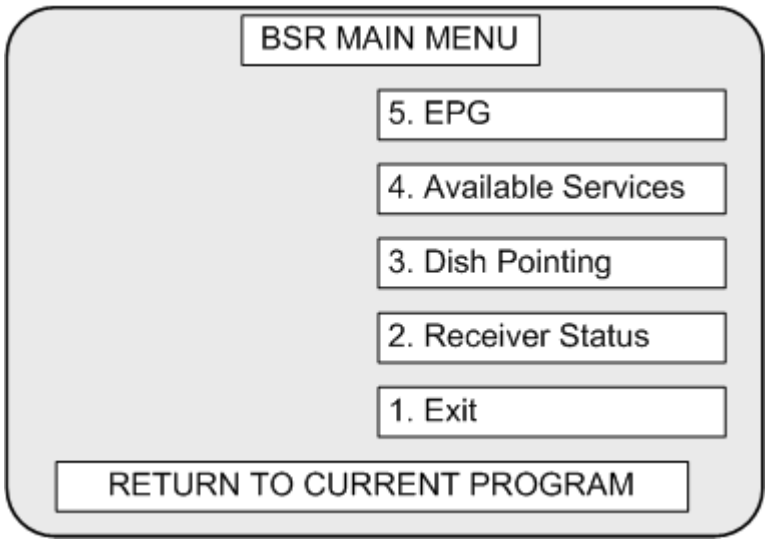


**Figure 4-8 BSR Main Menu**

8. Display the RECEIVER STATUS MENU by pressing 2 and then SELECT, or move to Receiver Status using the scroll arrows on the remote control and press SELECT. See Figure 4-9 for example.

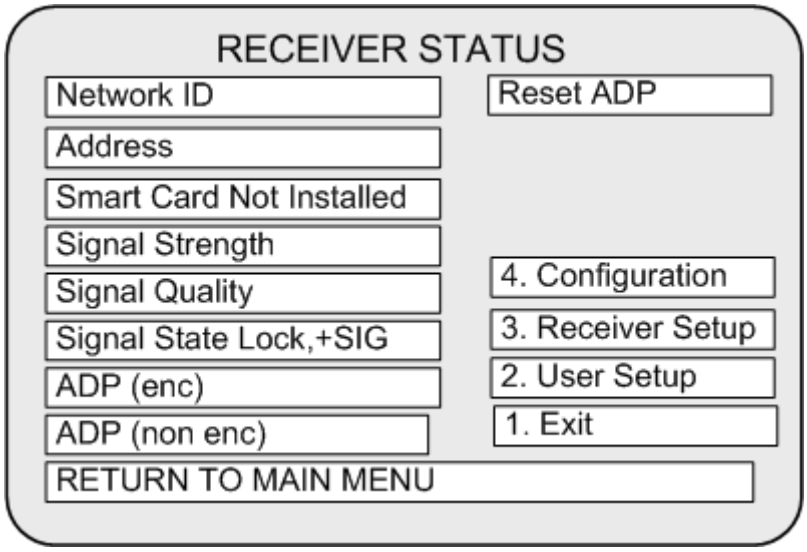


**Figure 4-9 Receiver Status Menu**

9. Display the RECEIVER SETUP MENU by pressing 3 and then SELECT, or move to Receiver Setup using the scroll arrows on the remote control and press SELECT. See Figure 4-10 for example.

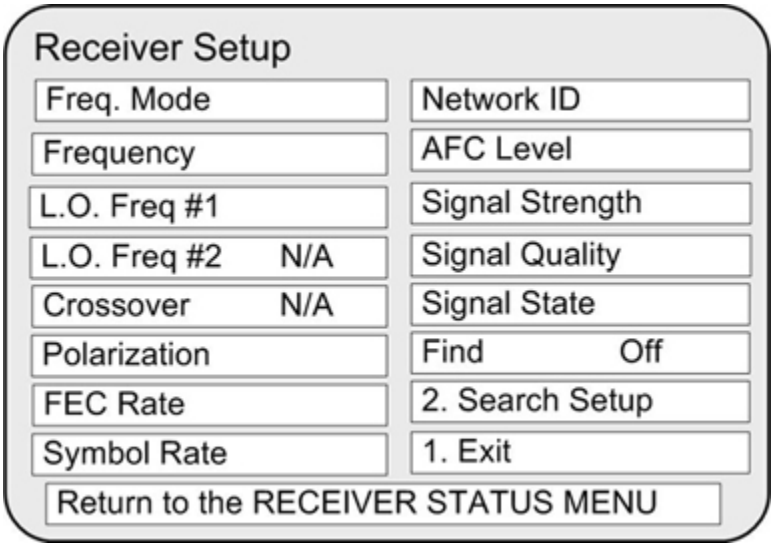


**Figure 4-10 Receiver Setup Menu**

10. Once in the RECEIVER SETUP MENU (as shown in figure 4-10), scroll to the Freq Mode block and set to L-band/#1 using the SELECT button.
11. Scroll to the L.O. Freq # 1 Block, push SELECT button to clear the entry, enter the appropriate L.O. Freq for your satellite region (See PowerVu setup information in appendix D)
12. Scroll to the Frequency block, push SELECT button to clear the entry, enter the correct frequency for your satellite region. (See PowerVu setup information in appendix D) Push the SELECT button to store (save) the Frequency block setting. The L.O. Freq. #2 and crossover blocks should be set to N/A.
13. Scroll to the Polarization block, push the SELECT button to enter H (fixed).
14. Scroll to FEC Rate block, push SELECT button to enter appropriate FEC Rate for your satellite region. SatNet users should select 3/4 and DTS users should select 2/3. Do <u>not</u> push SELECT button at this time.
15. Scroll to the Symbol Rate block, push SELECT button to clear the entry, enter the appropriate Symbol Rate for your satellite region. (Refer to appendix D) Push the SELECT button to store (save) the setting.
16. Scroll to the Network ID block, push SELECT button to clear the entry, enter the appropriate Network ID for your satellite region. (Refer to step 20) Push the SELECT button to store (save) the setting.
17. Scroll to the Exit block and push SELECT. (A yes/no box to store settings will appear.) Push 1 to store the settings. This will return you to the Receiver Status Menu. Scroll to the Exit block on this menu and push the SELECT button. This will return you to the BSR MAIN MENU. Scroll to Exit and push the SELECT button. This will return you to normal viewing.

18. Virtual channels can be selected using the remote control or the channel up/down switch located on the front of the IRD. Enter a channel number, e.g., 01 and push SELECT from the remote. Then press the standby switch once. If your system requires a software upgrade, it will begin automatically. Allow the system to totally download the updated software. (Download procedure could take up to 30 minutes) Once the download is complete the decoder will return to normal operation on the last channel that was selected prior to beginning the download.
19. Local off-the-air reception is available through the IRD. Refer to page 3-5 of the installation manual for connecting for off-air reception.
20. Note: the remote control must have unobstructed line-of-sight to the IRD for proper operation.

**Important note**: all C-band LNB's have a local oscillator (L.O.) frequency of 5.150 GHz but Ku-band LNB's may come in many different frequencies typically 9.750 to 12.75 GHz. This means that if you're attempting to watch a Ku-band service you need to set the decoder's frequency using a bit of simple math. The formula to set the Ku-Low/Single L.O. frequency on the AFRTS decoder is the downlink frequency minus the L.O. frequency. As an example the downlink frequency for the IntelSat 802 satellite serving the Japan and Korea Direct to Home service area is 11.6380 GHz. An LNB with a local oscillator frequency of 10.000 GHz would give a Ku Low/Single L.O. frequency of 1638 MHz (1.638 GHz) by working the math problem 11.16380 – 10.000 = 1.638. The Ku-band satellite serving the European service area is HotBird 4 at 13 degrees east and it has a downlink frequency of 10.775 GHz. Connecting an LNB with a local oscillator frequency of 9.750 would result in a receiver frequency of 1025 MHz (10.775 – 9.750 = 1.025 GHz which is 1025 MHz).

### *Troubleshooting Guide*

**Satellite integrated receiver decoder will not turn on.**

(1) Check to see if the receiver is plugged in to the wall jack.

(2) Try plugging the receiver into a different electrical outlet. Be sure you're not plugged into a "half hot" or "switched" outlet controlled with a light switch.

(3) Plug your TV into the same outlet and see if it will power on.

(4) Make sure the problem is not with the receiver. Turn on the receiver both from the front panel and with the remote.

(5) Check the fuse box circuit breaker.

**I cannot set the receiver to the on-screen menu.**

(1) Check to see if your TV is tuned to the correct channel (Either 3 or 4) and select the same on the back of the receiver.

(2) Check to see if you are using the correct connections from the Receiver to the TV. Are you using the RF (To TV) connection and connected to the "from antenna on the TV". Are you connected to the Video output from the receiver, to the video input on the TV/Monitor.

(3) If you are using the RF connection from the receiver to the TV, tune to channel 3 or 4.

(4) Turn the receiver on from the remote or the front panel.

(5) In the Receiver setup menu select NTSC.

**I cannot pick up the satellite signal**

(1) Have you gotten your receiver Authorized?

(2) Check that all connections from antenna, receiver, and TV are correct.

(3) Make sure there are no obstructions blocking the antenna's view to the satellite. Always stand behind the antenna, not in front while checking.

(4) Check that the antenna is set to the correct polarity, for example, Horizontal, Vertical, Left Hand circular or Right Hand Circular.

(5) Check the antenna azimuth and elevation settings, if wrong see "Antenna Pointing".

(6) Tune the receiver to the "Receiver Setup Menu" on the 9234 or the "Installer Menu" on the 9223. If the signal indicator reads Sig+Lock, check the following for your location and service. If all of the following are correct; chances are good that your decoder isn't authorized in the AFRTS decoder database; call for authorization – see this chapter's "IRD Authorization".

a. Network ID

b. FEC Rate

c. Frequency

d. Band

e. L.O.

f. Polarization

g. Symbol Rate

h. Video Standard is (NTSC)

(7) If the signal indicator in the “Receiver Menu” reads No Signal check the cable from the antenna to the Receiver.

(8) Rarely you might be attempting to receive the signal during either a sun outage or a signal outage caused by a technical problem at the up link site. These outages would affect an entire region at once so your neighbors and other service members at your command would have also lost signal. An easy check is to see if the signal is available at another receiver in your same location.

**I was receiving the satellite signal but it comes and goes or I get a lot of freeze frames and digital artifacts.**

This is the sign of a weak signal and can usually be traced to one of the following problems:

(1) Poor connection from the Antenna to the Receiver. Play with the connections to see if you can get the signal to intermit from Loss of Signal to Freeze-Frames. If so, redo or replace connectors.

(2) Antenna is not peaked or is too small.

(3) LNB does not meet specifications.

(4) Poor quality cable or connectors in use or impedance mismatch.

(5) Signal level input to the IRD is too high; optimum input is –42 dBm.

(6) Antenna is not stable; wind moves or shakes the antenna excessively.

(7) Terrestrial Interference.

(8) This could be caused by a regional sun outage where the sun passes directly behind the satellite. At certain times of year, approximately one month either side of the spring and autumn equinoxes, there may be a conjunction of the sun and satellite positions. Depending upon the size of the earth station antenna, such events can lead to a serious impairment of the space-earth link. These outages typically last only a few minutes at a time once a day with a normal worse case outage of about ten to fifteen minutes. Outages will affect each link in multi-hop circuits. For example viewers in Europe or the Indian Ocean area would be affected by an outage of first, the Atlantic satellite and then secondly, of the actual satellite feeding their antenna. Antennas should not be adjusted or re-pointed at these lost-of-signal times.

The viewer should wait out the outage until the sun finishes passing directly behind the satellite.

## *Remote Control Problems*

**The remote will not turn the receiver on or off.**

(1) Check batteries, replace if necessary.

(2) Is the TV tuned to the correct channel (3 or 4).

(3) Are you using audio and video from the Receiver to the TV? If so, is your TV/Monitor set appropriately “line or video”.

(4) Is there anything blocking the signal getting to the receiver from the remote? Remotes are Infrared and will not work if blocked by any object.

## *Receiver Problems*

**Receiver does not accept input on the front panel.**

(1) Check to see if receiver is set to Loc level 3 or Loc 4 and reset if necessary.

# Chapter 5 : Distribution of Multiple Video and Audio Services

Distribution requirements for AFRTS Radio and Television service have changed dramatically with the implementation of the PowerVu digital compression system, which provides multiple channels of TV and audio. B-MAC delivered one video service over (SATNET) and a limited number of audio services. Most AFRTS networks distributed one channel of AFRTS Television over-the-air through VHF or UHF transmitters or as a single channel over cable systems, and radio was broadcast over one or two FM and AM transmitters. Although these delivery systems are still in use today, there is a growing demand to deliver as many of the expanded services now available over SATNET and DTS to the audience as possible. This chapter addresses the three major types of multi-channel delivery systems: CATV, MMDS, and Hybrid Satellite/Off-Air reception systems.

The most commonly used multi-channel delivery method for both AFRTS TV and radio services is cable distribution. If sufficient cable bandwidth is available an expanded or medium to large cable system can be used to deliver both TV and FM radio services

Another method for delivery of multi-channel service is Microwave Multi-point Distribution System or MMDS. MMDS is an effective method of delivering multi-channel AFRTS service to authorized audience members who do not live on Military Compounds and are not served by a cable system; however it requires host nation frequency approval. In most cases AFRTS requires MMDS systems to be encrypted. MMDS systems currently in use in Riyadh, Saudi Arabia use Zenith, (Z-TAC) and MacroVision addressable encryption systems, respectively.

A third method or receiving multiple AFRTS services is through the use of a combination of off-air and direct satellite reception. This method is especially viable in Europe where the service can be received off Hotbird 4 using a 80cm Ku TVRO.

## *I. DOD CATV Performance Specifications and Testing Procedures*

**Overview.** This chapter describes DOD operated CATV systems, establishes performance standards for these systems, and promulgates standard testing procedures. This chapter may also be of use in monitoring commercial CATV systems serving DOD audiences. In the case of Commercial CATV systems, FCC regulations, Federal or Host Country law may affect the degree of regulation allowed. (Note: In the event that Host Country regulations are more stringent than DOD Specifications, Host Country regulations shall take precedence.)

### a. Assumptions regarding DOD Cable Systems:

- All CATV systems utilize broadband coaxial cable technology;
- Tree and branch, or hub and spoke architecture is used;

- Systems carry NTSC television signals;
- Systems may carry FM Audio signals;
- Systems are used to carry entertainment and informational programs. No secure or classified material is carried.

**b. System Characteristics:**

- Forward Bandwidth:
- Minimum 54-220 MHz {300 MHz}
- Maximum 54-450 MHZ {750 MHz}

2. Reverse Bandwidth:

- Minimum 5-30 MHZ; May not be active in some systems

| Table 5-1 Downstream Channel Capacity | | |
|---|---|---|
| **Frequency Band** | **Frequency Range (MHz)** | **Number of Available Channels** |
| LO VHF | 54-88 | 5 |
| FM | 88-108 | -- |
| FM Mid Band | 120-174 | 9 |
| Hi VHF | 174-216 | 7 |
| Super Band | 216-300 | 14 |
| Hyper Band | 300-450 (750) | 25 (75) |
| Totals | | 60 (110) |

| Table 5-2 Upstream channel capacity | | |
|---|---|---|
| **Frequency Band** | **Frequency Range (MHz)** | **Number of Available Channels** |
| Sub Low* | 5-30 | 4 |
| *Also known as “T” channels; T-7 through T-10 | | |

## *II. Discussion*

CATV is a closed circuit communications system used to deliver television and audio signals. It delivers these to a select group of viewers-a military base, an individual building, an individual ship, or an individual room/compartment. Other types of signals can be carried on a CATV system such as data, telemetry, or video conferencing. However, the primary purposes of the systems discussed

here are information and entertainment. They are **not** appropriate for the transmission of signals containing sensitive or classified information.

### a. Authorization

Since CATV is a closed system, it is allowed to use frequencies that have been previously authorized for over the air broadcasts. The most obvious of these are the over the air VHF television and FM radio frequencies. More critical are frequencies in the ranges of 108-137 MHz, 140-174 MHz, and 225-400 MHz. Commercial and governmental air and sea navigation, air traffic control, harbor navigation, and the U.S. Coast Guard may use these frequencies.

### b. Signal Leakage

CATV is a secondary user of these frequencies, and is responsible for insuring that its use does not interfere with the primary user. This interference arises from signals leaking out of the CATV system. Signal leakage, or radiation, occurs when the physical or electrical integrity of the CATV system is compromised. This can occur due to cracked cables, haphazard connections, vandalism or unauthorized connections to the system. In CONUS, the FCC can levy fines on “leaky” systems, or force them to abandon certain frequencies. The FCC has not been reluctant to exercise this power. (In reviewing this area, the FCC has established a figure of merit called a “Cumulative Leakage Index” which accumulates all leakage data into one measure.) DOD CATV systems must be especially aware of signal leakage requirements due to the proximity of over the air users. DOD CATV must take all steps necessary to insure that its signals do not interfere with other frequency users.

### c. Signal Quality

Perceived signal quality at any location can be simplified to consist of two major factors: first signal strength, and second signal quality. Signal strength is a simple measurement, but signal quality is a more complex issue. If the wrong value of tap has been used at a location, the signal delivered to the television may be too weak to deliver a good picture. Similarly, if too much drop cable is used, excessive attenuation could be introduced, dropping levels to an unacceptable level. In situations like these, using different components can allow sufficient signal levels to be delivered. If this has been tried with limited success, additional amplification may be needed. This amplification must be placed at the proper location in the system if any benefits are expected. Signals must be amplified before levels have dropped so far that quality is affected. CATV amplifiers <u>cannot</u> improve signal quality; they can only amplify signal levels. A noisy signal, amplified, is not going to be a better signal. It is going to be a more powerful, noisy signal. The key is to amplify the signal when the relative level of the signal is well in excess of the level of noise and any other distortions. CATV amplifiers themselves, add noise and distortion to the signals, a fact that the system designer must take into account.

**Table 5-3 Performance Standards for Acceptable CATV Operations**

| Standard | Requirement |
|---|---|
| Signal levels at subscriber set | 3-10 dBmV |
| Carrier levels | |
| Single channel video vs. audio levels | Audio carrier shall be 15 dBmV +/- 2 dB below associated video carrier |
| Single channel video carrier | Shall vary no more than 12 dB in any 24 hour period |
| Adjacent channels | Video carriers will be within 3 dB of any adjacent channel video carriers |
| All channels | Video levels will be maintained so that the maximum difference across all channels will be 10 db for systems up to 300 Mhz, with 1 db allowed for each additional 100 MHz, or portion; i.e. 300 – 400 MHz would allow 11 db maximum variation. |
| **Distribution System Performance** | |
| Carrier to Noise (C/N) | Any channel, greater than or equal to 43 dB |
| Hum modulation | Any channel less than or equal to 4% |
| Hum modulation at power frequencies | Any channel less than or equal to 3% |
| Cross modulation | Any channel greater than or equal to 53 dB |
| Composite triple beat | Any channel greater than or equal to 53 dB |
| Signal Leakage (Radiation) | |
| Frequencies less than or equal to 54 MHz | 15 mV/meter measured 100 ft. from the system |
| Frequencies between 54 MHz and 216 MHz | 20 mV/meter measured 10 ft. from the system |
| Frequencies greater than or equal to 216 MHz | 15 mV/meter measured 100 ft. from the system |

### d. System Constraints

In most non-commercial DOD CATV systems, channel loading is usually light, limited to a few of the VHF frequencies. In systems of this type, perceived signal quality is most affected by: Signal Levels, Carrier to Noise, Hum Modulation, and to a lesser degree, by distortions like Cross Modulation and Composite Triple Beat. In more heavily loaded systems, Cross Modulation and Composite Triple

Beat become increasingly more important. This is because these distortions arise from the mixing of signals in the CATV system. As the number of signals increases, the distortion products also increase. Navy ships are in a unique position as they have a lightly loaded system when under way, but can have a heavily loaded system in port, if commercial CATV is available on the pier.

## *III. Testing Procedures.*

Attachment 1 presents the approved methods for testing CATV systems to show performance conforming to the following standards. The National Cable Television Association (NCTA), the CATV industry association in the United States, have developed these procedures. The DoD has determined that these procedures reflect good engineering practice in the CATV industry, and has included them here with the NCTA's permission. Please note that the NCTA fully supports the following testing methods. It has chosen not to endorse any single set of absolute standards that are to be met. This is due to the wide range of types of systems in the United States, and the differing levels of standards that may be applicable. The standards presented are promulgated by DoD to define the minimum acceptable level of service for DoD CATV systems. Appendix 1 provides recording forms for system tests. These are reprinted with the permission of the Society of Cable Television Engineers.

## *Applicability of Tests*

As noted above, different systems will need to place different emphasis on particular aspects of system performance. All systems must minimally monitor signal levels and signal leakage. Systems with light channel loading must also be concerned with carrier to noise and hum modulation. Systems with heavier channel loading must add composite triple beat and cross modulation to their areas of concern. If test equipment is not available, or alternate testing methods are desired, such as the use of automated test equipment, Detachments and networks should request variances within their chain of command.

## *Scheduling of Tests*

Included here is a suggested timetable for testing. The schedule is for planned preventive maintenance. It is in addition to all demand maintenance requirements. Tests should be made at the system headend, and at, at least three locations in the distribution system, chosen to be representative of worst case expected service. Signal leakage <u>must</u> be monitored/checked through out the entire CATV system. Documented results of all testing should be maintained. This will allow for trend analysis, and will aid in transitioning.

As of 30 JUN 95 the FCC will allow the application of three additional standards for measurement of the performance of a cable system. These standards are set at the output of the modulating or processing equipment, which in most cases would be at the system head end.

| Parameter | Requirement |
|---|---|
| Chrominance-luminance delay inequality chroma delay | Less than 179 nanoseconds |
| Differential gain | +/- 20% |
| Differential phase | +/- 10 degrees |

The Standards are:

**Note:** the FCC only requires testing demonstration this performance be completed every three years.

| Parameter | Frequency | | |
|---|---|---|---|
| | **Continuously** | **Weekly or Monthly** | **Annually** |
| Signal levels | X | X | X |
| Signal leakage | X | X | X |
| Carrier levels | | X | X |
| Hum modulation | | X | X |
| Carrier to Noise | | X | X |
| Cross modulation | | X | X |
| Composite T Beat | | X | X |

### *Digital Television*

There are no industry standards at this time delineating acceptable performance of a broadband digital television system. There are no specific standards detailing how any individual digital channel should be delivered.

Many system operators are contemplating a mix of differing signal formats including NTSC, Encrypted NTSC, Digital, and HDTV on a single cable system. Although some assumptions are well accepted (e.g. digital signal will be able to be run acceptably at much lower max signal levels than NTSC) overall system performance may be affected by the overall channel loading/channel mix.

As the industry settles on transmission standards and loaded systems begin operating, the FCC may initiate rule

## *IV. Out of CONUS CATV*

As noted earlier, Host Country regulations and requirements should be determined. The most stringent requirement shall take precedence.

## *V. Commercial CATV.*

As noted earlier, Commercial CATV operators, serving DOD audiences in CONUS locations, may be subject to additional/different technical requirements promulgated by the FCC or Federal law. Readers are strongly encouraged to familiarize themselves with all local franchises/agreements concerning CATV at their location. They may then check through appropriate channels for guidance on federal policy and law.

# Chapter 6 : Radio and Television Cueing

## *At AFRTS-BC*

Cueing for American Forces Radio and Television Service (AFRTS) Radio and TV is accomplished using a Wegener cueing system designed to originate radio and TV cues using a Binary Coded Decimal (BCD) configuration. A four contact closure BCD system is used to produce a maximum of 15 cues on the Decoder side.

For the purpose of identifying only, programs are placed into the following categories: normal and live or quick turn-around.

### Normal Programming:

Normal programming includes programs that the BC has on hand long enough to completely process (more than 72 hours). Entertainment programs, soaps, and non-time-sensitive specials fit into this category.

Part of the processing is slugging and entering times for playback in Odetics. Accurate times are then included in the STB (Regional and Local breaks) file for normal programming. Program times (actually the segment duration's only) are retrieved from the Odetics database and entered into the traffic management program database.

Once entered into traffic management program, the times become a permanent part of the program record. Approximately 5 days prior to airdate, a file is exported from traffic management program that includes program information for each AFN network and airdate. The file includes title, subtitle, house #, and times for programs scheduled to air on that date. This file is imported into a traffic program. Once the information is loaded, the command information availabilities are adjusted to fill in the time slots.

Finally, an STB file is created and placed on the FTP for downloading at affiliate locations. Frequently, times are not available 5 days out, but are available more than 72 hours prior to air-date. In these cases, the traffic log is updated and a new STB file is posted reflecting the update.

### Live and Quick Turn-Around Programming:

Not all programs are available to be processed in advance, such as most sporting events. Live and quick turn-around programming is programming that the BC airs within 72 hours of acquisition. News, sports, late shows, most specials and other programs that are time sensitive are included in this category. In most cases these times are not available to the BC in advance; consequently, the times in the STB file are not accurate for these programs.

Cueing within Odetics is controlled by four separate relays that are activated by command lines imbedded in the program playlist. These four relay commands are combined together in the Wegener tone encoder to generate a total of 15 individual cues. Each cue is attached to an event in the play list and can be

programmed to activate before or during the event. Cues for TV are attached to the beginning of an event and are transmitted 21 frames in advance of the scheduled event.

The Wegener Tone Decoder requires 14 frames to detect a cue with an additional 7 frames added for startup time of automation equipment. Also, there are several different variables that can affect their accuracy to within +/- 2 frames. This isn't a problem as long as there is enough black on each end of the spot and the spot itself is timed correctly.

The AFRTS standard is a minimum of 15 frames of black at the beginning and end of each spot to ensure a clean cut from one event to the next. This wasn't a problem when the entire spot break was covered by AFRTS. Although AFRTS does fill the available spot interval, affiliates are sharing some of the allotted time and expect to return to the network during a fade up from black. This demands frame accurate timing and can only be accomplished if each player has correctly formatted their spots with the appropriate amount of black.

All cues for TV are scheduled and initiated electronically with the exception of the "Return to Net" cue. This cue should be connected at all locations to bring locations back to Net for varying reasons. See table 6-1 for a listing of television service cue assignments. The majority of the time this cue is employed to bring affiliates back to net during live events with unknown spot intervals. Otherwise, if the affiliate is in the middle of a spot break and the event returns to normal programming the length remaining in the spot break is missed.

Cueing for radio is also timed to frame accuracy but times aren't as critical as for TV. For this reason radio cues are not transmitted in advance of the scheduled event. Cues for radio are scheduled in a daily template/play list and require very little interaction to keep current with program material. Cues are originated for radio within the AudioVault play list and are timed to real timecode. Cues for radio use the same principle of BCD function of four separate relays to produce 15 distinct cues. See table 6-2 for a listing of radio service cue function assignments. Unlike Odetics the AudioVault database is capable of storing individual command lines for each cue assignment. Each cue is assigned an individual command line and shows up in the play list as a single event.

## *Encoder Installation and Operation*

Cueing for American Forces Radio and Television Service (AFRTS) Radio and TV is accomplished using the Wegener 1601 mainframe equipped with the appropriate electronic package. At the Encoder the Wegener Communications Model 1698 Tone Encoder unit is used to originate radio and TV cues, using a Binary Coded Decimal (BCD) configuration. A four contact closure BCD system is used to produce a maximum of 15 cues on the Decoder side. The inputs required for various output tone combinations are listed in table 6-3.

| Table 6-1 TV Services Cue Function Assignments | |
|---|---|
| **Cue** | **Function** |
| 1 | STB (regional brake) |
| 2 | LCL (local affiliate break) |
| 5 | Return to network |
| 6 | Advisory start |
| 8 | Shared ID |
| 9 | Soft Start Cue (arming window disenable) |
| A | Soft End Cue (arming window enable) |
| C | VCR Wakeup (5 second warning of cue 2) |

Cue “9” puts an AVID into the event stack mode; a cue “A” puts the AVID back into the timed playlist mode.

| Table 6-2 Radio Service Cue Function Assignments | |
|---|---|
| **Cue** | **Function** |
| 1 | Start of breakaway |
| 2 | Top of hour |
| 3 | Sixty second breakaway |
| 4 | Linear five second ID |
| 5 | Seven second ID |
| 6 | Nine second ID |
| 8 | End of message / stop |
| 9 | Legal ID (top of hour) |
| A | Forced recall |
| B | End of forced B recall |
| C | Ballgame spots |
| D | Extended breakaway |
| E | End of ballgame |

| Table 6-3 BCD Function | | | | |
|---|---|---|---|---|
| **Seven Segment Display** | **1**<br>**25 Hz Left** | **2**<br>**25 Hz Right** | **4**<br>**35 Hz Left** | **8**<br>**35 Hz Right** |
| 1 | X | --- | --- | --- |
| 2 | --- | X | --- | --- |
| 3 | X | X | --- | --- |
| 4 | --- | --- | X | --- |
| 5 | X | --- | X | --- |
| 6 | --- | X | X | --- |
| 7 | X | X | X | --- |
| 8 | --- | --- | --- | X |
| 9 | X | | --- | X |
| A | --- | X | --- | X |
| B | X | X | --- | X |
| C | --- | --- | X | X |
| D | X | --- | X | X |
| E | --- | X | --- | X |
| F | X | X | X | X |

The tone encoder is used to add cue tones to program audio for transmission over satellite and local transmission systems. This enables AFRTS-BC to provide network controlled automated commercial insertions at affiliate locations. The duration of the output tone(s) is controlled by an enabling input. AFRTS presently uses Odetics and Alamar to control cue duration.

All circuits of a Model 1698 tone encoder are contained on a single level standard 4.25 by 12-inch printed single board. Any unit module will occupy one slot position of a model 1601 mainframe, a model 2601, or model 1602 mainframe. The difference between a model 1601 and model 2601 mainframe is the type of back plane interface connectors used; otherwise they are nearly identical.

The Model 1698 tone encoder receives stereo audio inputs from an external source and inserts tones on the two channels. This unit can provide 15 different tone output combinations by inserting selected 25 Hz and/or 35 Hz tones on the right, left or both audio channels (Table 6-3). The tone output selection is controlled using four BCD logic inputs.

The audio level of each channel can be adjusted through front panel controls LEFT R67, RIGHT R61 (figure 6-1). The adjustments are the same as a Decoder. There is a control on the front panel to adjust the duration of selected tones, R134. The tones can be jumper selected (jumper J9) to either be present only while the BCD inputs are active, or be continuous for a duration from approximately 0.5 second to 5.5 seconds after the BCD inputs are removed. The front panel also provides a green indicator that lights when tones are being generated and a seven-segment display for visual identification of the selected tone combination. Test points on the front panel provide for monitoring of channel function during normal operation.

Note: All program audio below 50Hz is stripped to allow for inserting cues tones, by the Wegener encoder. Therefore, processing of audio below 50 Hz. Is not productive and may increase the risk of unwanted cues tones in programming. Also, Wegener tone encoders are set at the factory at +6dB for a single frequency cue (25 or 35 Hz.) and +9dB for multiple frequency cues (25 and 35 Hz. Combined) cue tone output. The AFRTS level is set to +4dB for single frequency cues and +6dB for multiple frequency cues. This is the absolute minimum level (+4dB / +6dB) allowable by Wegener without modification to the card for alignment cue tone levels.

## *Decoder Installation and Operation*

Wegener 1645/46/47/48 tone decoder: The purpose of the tone decoder is to detect the presence a 25 or 35 Hz cue tone on demodulated program audio. The tones are transmitted by the network on program audio channels. Model 1645 is for 25 Hz, model 1646 is for 35 Hz detection, and model 1648 is for 25 Hz and 35 Hz detection. AFRTS has the capability of originating 15 distinct cues on all of its program audio channels with the exception of the Contingency radio service.

Figure 6-2 illustrates how tone decoders are used in typical applications. The program base band source, from a demodulated audio source, is routed through the decoder. In the process, 25 or 35 Hz detectors are used to detect the presence of either a 25 Hz, or 35 Hz tone, or in the Model 1648, 25 and 35 Hz tone combinations. Upon detection, the decoder operates on the 15 contact closures. The contact closure is used to switch external devices such as automation systems to control routing of program audio and start automation equipment for the purpose of recording and/or playing local spots. A very important part of the decoder detection process is the removal of cue tones from program audio.

Demodulated audio from the PowerVu Integrated Receiver Decoder (IRD) is wired directly to the audio input of the 1648 Wegener tone decoder for cue tone detection. The reason for inputting program audio from the IRD to the decoder is to detect cue tones and to separate audio cues from program audio. This will eliminate annoying audio cues from program audio that in some situations can and will be audible to the audience. Audio output of the decoder is unbalanced and in most applications will require converting to a balanced output. This can be accomplished by installing an unbalanced to balanced audio card. Several

manufactures supply conversions from unbalance to balanced audio modules: the Wegner 1659 is one example. Cues tones are seldom audible because of their sub-audible tone characteristics and short duration before they are masked by program audio; however, Wegner recommends stripping the tones through the use of a tone decoder.

The model 1648 tone decoder is capable of handling balanced or unbalance audio inputs. The two position jumpers located on the end of the decoder card should be strapped on the dot position for balanced and away from the dot for unbalanced audio inputs.

Ensure that the audio outputs are properly phased, that is, use the same pin from each connector to the (+) and (–) outputs. Also, maintain left and right order. By referring to table 6-1 you will see that if you cross-input a cue such as 25 Hz to the right channel instead of to the left channel you would receive a cue 2, as opposed to the intended cue 1.

To interconnect audio outputs from the Model 1648 tone decoder to external equipment, connect J7 (left channel), and J9 (right channel) to the external equipment. Outputs from the 1659 (Unbalanced to Balanced) card are 600 ohms balanced signals, pins 1 and 3 are differential balanced audio, pin 2 is chassis ground. (see figure 6-2 for level adjustments and figure 6-1 for wiring diagram).

## *Controls and Indicators*

On the front of the decoder card is an LED activity display (figure 6-2). The display exhibits, in hexadecimal form, the numeral of the last tone transmitted. Tones 1 through 9 will be noted as numerals 1 though 9; note 10 through 15 will be indicated as letters A though F respectively. The green indicator beneath the LED display will illuminate during the transmission of any tone function. The indicator will extinguish upon termination of tone, but the led display will continue to display the last tone transmitted. Test points labeled “LEFT”; “RIGHT”, and “GROUND” are available to monitor program audio at any time. The test points are 1K Ohm unbalanced signals.

Three adjustments are available from the front panel. From top to bottom they are R32, R73, and R153. Functions are LEFT channel gain, RIGHT channel gain, and variable contact closure time. Variable or fixed duration is selectable by jumper J9, located in the middle of the card. In the fixed position the duration of the contact closure is slaved to the duration of the incoming tone. In the variable position the duration of the contact closure is adjustable by R153 from 0.5 seconds to 5.5 seconds. **CAUTION**, if a second tone is received before the end of the fixed duration time the second cue will not be recognized or decoded

## *1644 Relay Card*

The 1644 relay card is composed of 15 relay closures that can be set to normal open or normal closed for each of the 15 independent relays. Up to five 1644 Modules may be used in a single Model 1601 Mainframe. Wegener instruction manuals are vague on how this card is connected to function properly with the

1648 tone decoder card. The 1644 relay card will not work by simply plugging it in next to a decoder card as the Wegener instruction manual will lead you to believe (see wiring diagram, figure 6-1). Connecting Figure 6-1 is a pictorial view of the rear back plane of a 1600 series Wegener mainframe. The following circuit description is taken from three Wegener manuals and is intended to simplify the process of interconnecting different modules (figure 6-1). Pins 2, 4, 6, and 8 from the 24-pin connector, are the Decoder BCD outputs needed to operate the 1644 relay card. On each side of the 24-pin connector are 4 separate three-pin connectors. These connectors are labeled to identify pins 1 and 3 for pin layout and location. The 1644 Relay card is mounted in the mainframe in a vertical position and the two 3 pin connectors looking from the back of the mainframe are the relay card inputs. Connect pin 2 of the 24-pin connector to pin 1 on the top three-pin connector (BCD 1). Connect pin 4 of the 24-pin connector to pin 3 of the top three-pin connector (BCD 2). Connect pin 6 of the 24-pin connector to pin 1 of the bottom three-pin connector (BCD 4). Connect pin 8 of the 24 pin connector to pin 3 of the bottom three pin (BCD 8).

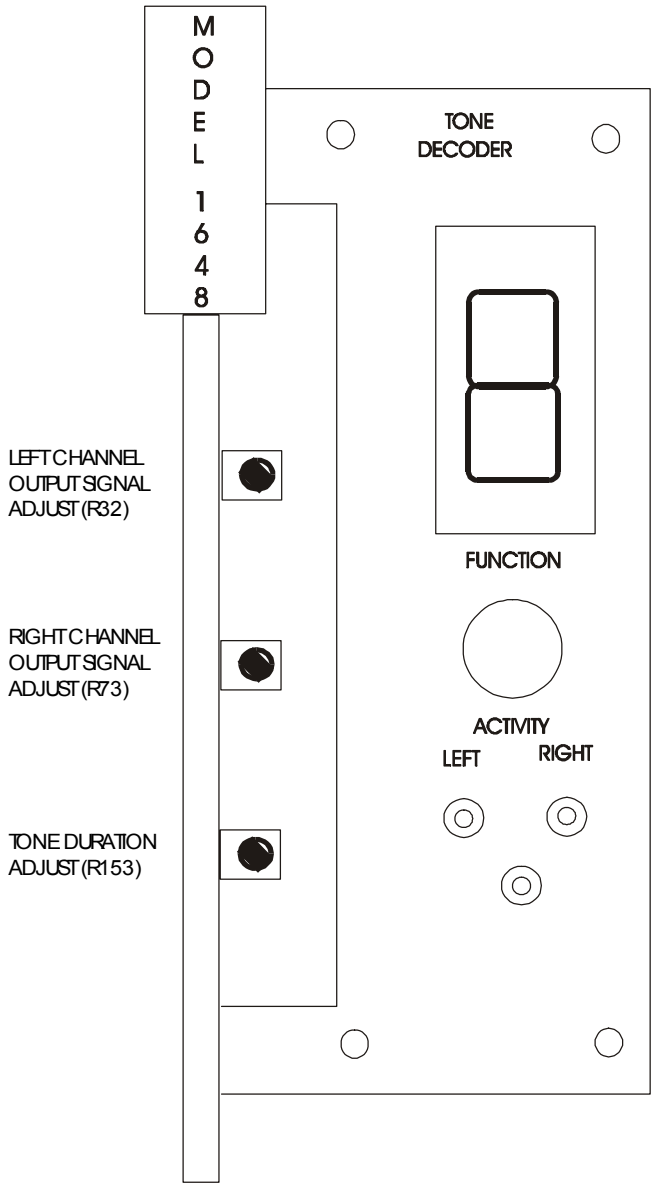


Figure 6-2: Model 1648 Tone Decoder, Front Panel Indicator and Controls

# WEGENER CUE TONE DECODER AND RELAY WIRING DIAGRAM

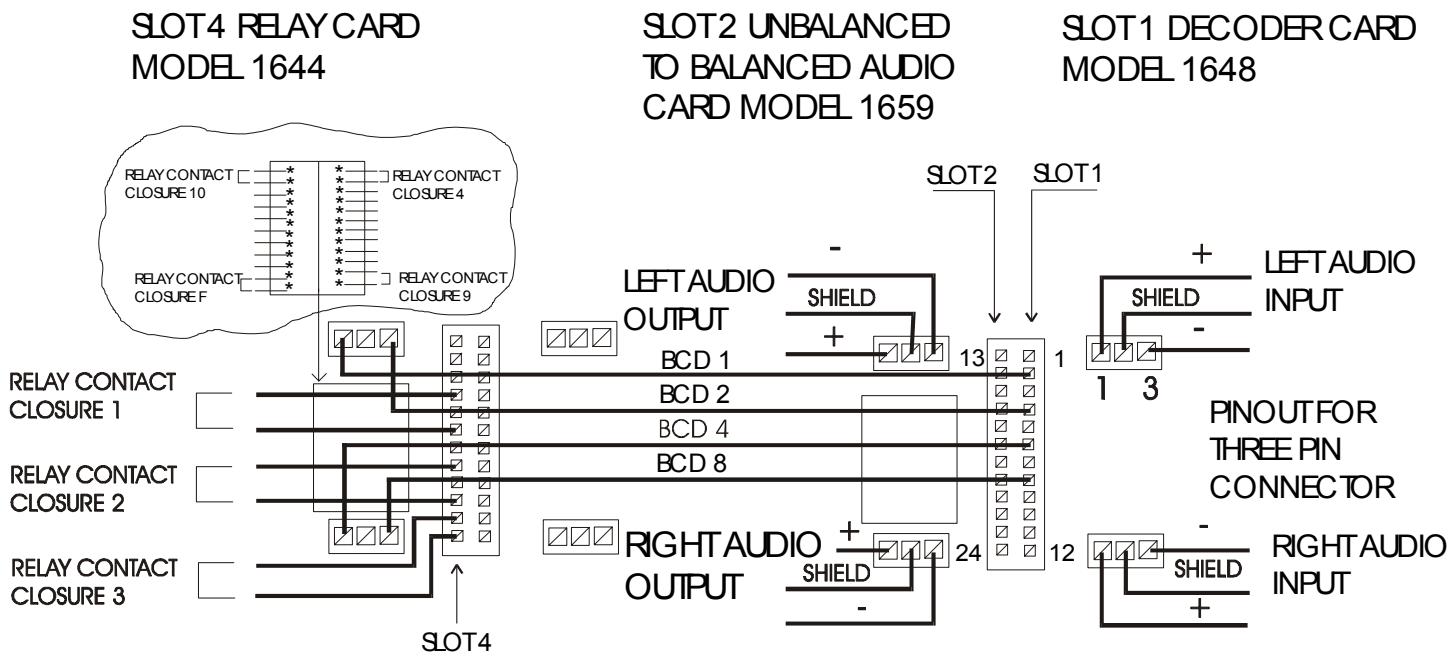


Figure 6-1: Decoder Setup utilizing Wegener Unbalanced to Balanced Audio and 15 Contact Closure Relay Cards.

# Chapter 7 : Datacasting

## *Technology Description*

Datacasting is an important element of the all-new “push technology” of the new millennium. It refers to the integration and wide delivery of data from a digital or analog transmission system. Raw data consisting of multimedia-media, programs, newspapers, magazines, news, entertainment, art, graphics, alert and real time control systems are multiplexed together as part of an Internet or MPEG payload. The information is transmitted over fiber, terrestrial and satellite networks. Considered by some to be the “Third Golden Age of Television”, datacasting will play some part in our lives in the future. Information delivered across the world in seconds versus getting information hours or even days later, will have astounding impact on worldwide communications.

At AFRTS-BC, different types of data are processed, multiplexed, and transmitted to both of the International satellite networks, SATNET, (C-Band and Ku-Band), and DTS (DTS Pacific and the DTS Indian/Atlantic). The daily delivery of “Stripes Lite”, the electronic version of “Stars and Stripes” newspaper is one example.

## *AFRTS International PowerVu Datacasting Capabilities*

To completely understand how PowerVu works, you should carefully review Chapter 4 of this Handbook. The Scientific Atlanta PowerVu compression system, as explained in Chapter 4, comes complete with external data integration and extraction capabilities. External sources of data are combined into the MPEG-2 Aggregate bit stream directly at the Multiplexer where it is processed and fed to the modulator for worldwide transmission. PowerVu serves as a “direct pipe” or connection to all IRD’s (Integrated Receiver Decoders), which are tuned to a channel, which contains the data information. In other words, the data payload in PowerVu is transparent to whatever you connect to each end. See figure 7-1.

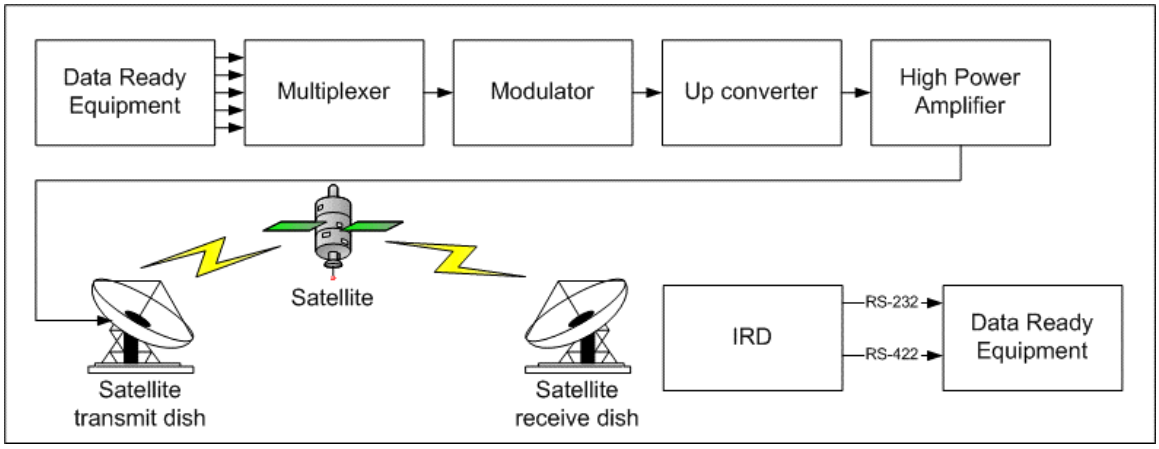


**Figure 7-1 PowerVu Datacasting**

The PowerVu compression system accepts two different types of data protocols for worldwide transmission; RS-422, Synchronous data for high-speed (data rates up to 2.048 Mbps), and RS-232, Asynchronous data for low speed (data rates up to 38.4 Kbps). Each PowerVu Network Multiplexer will accept up to two RS-422 inputs and four RS-232 inputs. It should be noted that PowerVu is limited to implementing this data by the number of bits/bandwidth available in each compression system. Once the data is supplied to the Multiplexer for worldwide transmission, properly configured virtual channels allow customers to access this data by connecting personal computers, printers and other data compatible equipment to the IRD data connectors located on the rear panel.

A serial printer such as an Epson FX-750 (or suitable substitutes with input buffer) can be connected to any one of a number of serial RS-232 connections. “Category 3”, or better communication network cables are recommended to be used as part of this connection. Cable lengths should not exceed 100 feet without the aid of an amplifier or repeater. (some locations claim normal operation with lengths up to 250 feet with “Category 5” network cable).

The RS-232 transmission link is considered to be a DTE, (data terminal equipment) to DCE, (data circuit terminating equipment) connection. In other words, the Demultiplexer is a DCE on the “output” side. See Figure 7-2.

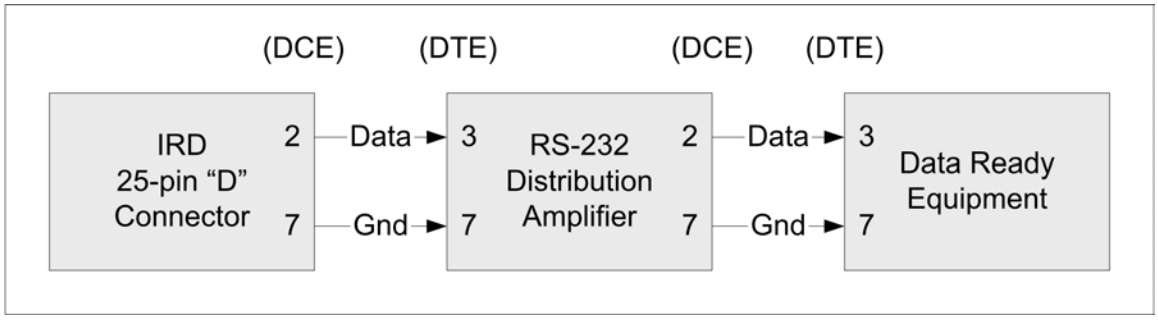


**Figure 7-2 PowerVu IRD RS-232 wiring**

Most, if not all PC serial input ports are configured as DTE; printers should be double-checked for a DTE or DCE connection. This is extremely important, because DTE and DCE connections are "reverse wired" in relation to each other

## *64 Kbps High Speed Data Channel*

The 64 Kbps high-speed data channel is currently configured and available on SATNET virtual channels 1, 3, 4, and 25. On the AFN Europe satellite signal, the data channel is configured on virtual channel 21 for Hotbird 4. (see appendix A for Virtual Channel Guide information). This high-speed data channel feeds AFN Broadcast Stations and Network Affiliates with a wide variety of data. Utilizing a Data Comm for Business SR-8 Demultiplexer, this channel currently provides:

- AIN (Affiliated Information Network program notes)
- News Wire (announcements and news from AP News, ABC, NBC, CBS, CNN, ESPN, Sports and other immediate news stories as they are released from North America.)
- Television and Radio Network Alert messages messages
- Television and Radio Network Alert messages (NAS) PA system announcements, One way communication from the AFRTS-BC to announce satellite outages and other important types of information.

All of this information is used by television and radio programmers, directors and chief engineers to assist in planning, editing, and loading program material and directing the operation of Radio and Television stations around the world.

The extra audio channel, which provides Network Alert announcements to AFRTS affiliate stations is an add-on modification provided by AFRTS-BC. (Contact the AFRTS Engineering department for more information)

The DCB SR-8 statistical Demultiplexer actually extracts data from a single RS-422 composite network link out of a Scientific Atlanta Power-Vu IRD and feeds up to eight RS-232 asynchronous terminal devices or an 8 channel Rocket Port for integration into the "NewsBoss Network". Asynchronous terminal devices may be dumb terminals, printers, plotters, and serial computer ports from PC computers via RS-232 DA's if desired.

**Basic Set-up**

There are two possible methods in which Affiliates can configure their stations for reception of this data channel. Stations can use either/or a combination of methods based upon individual configuration requirements. AFRTS-BC is currently using a combination of both methods. The first method A, utilizes standard VT-100 dumb terminals, PC's configured with VT-100 terminal emulation (HyperTerminal) and/or serial printers. The preferred method B, utilizes Desktop Technologies NewsBoss wire capture system. NewsBoss workstations run on Windows 95/98/2000 or Windows NT 4.0. Standard off the shelf PC based hardware can be used with the installed NewsBoss software (Pentium 200 minimum). NewsBoss Wires is a highly sophisticated wire capture and communications module that receives data from up to 8 RS-232 serial ports via the Rocket port. The system is scalable and has many configuration options. Using TCP/IP protocol the workstation can be connected to the affiliates LAN or WAN. This will enable you to feed the signal to Radio, Engineering, Network Control Center (NCC), Traffic, Network Operations, etc.

**Features of NewsBoss include**:

- Receives data automatically from up to 8 RS-232 sources using the rocket port.
- Sorts data by category (AIN, NAS, News, Sports, etc.).
- Enables notification of urgent and priority data via the screen or external alarm.
- TCP/IP connectivity to LAN or WAN.
- Modem capability for dial-up services.
- Simple to set-up and customize.

## *Equipment Requirements*

To receive data off the SATNET C-Band 64 Kbps channel, you will need the following minimum equipment as part of your satellite reception configuration:

**Method 1**

- 1ea Scientific Atlanta models 9223 803-201, or 9223 803-311, or 9223 803-313 IRD.
- 1 each Data Comm SR-8 demultiplexer with product manual.
- 3 each VT-100 dumb terminal and/or standard 286 PC or higher end model with available serial port (One unit is dedicated for the network management port, which the engineers will control and configure).
- 3 each Standard computer monitor and/or 3 each serial printers.
- VGA monitor (not needed if using dumb terminals).
- Data Com for Business (DCB) remote voice card (for voice card option).
- DCB SA-1 speaker amplifier (for voice card option).

- Speaker and power amplifier (for voice card option).
- Associated cables.

**Method 2**

- 1 each Scientific Atlanta models 9223 803-201, or 9223 803-311 IRD.
- 1 each Data Comm for Business SR-8 Data demultiplexer with product manual
- NewsBoss Workstation – Minimum Configuration requirements include Pentium 200 or above, 64 MB RAM, 4.3 GB IDE Hard Drive, Windows 95/98/2000 or Windows NT 4.0 Workstation, network interface card (NIC), SoundBlaster SB-16 or better audio card, 15 inch SVGA monitor, ZIP or JAZ backup drive.
- NewsBoss Software package:
    - Newsboss First Work Station (software), 1 each, Part # 808-5239, $2136.00
    - Software Maintenance Agreement 1-3 Workstations, 3 years, Part #978-7213-360, $982.00
    - Rocket port PCI-8 fast multi-port serial adapter, 1 each, 808-9157, $295.00

  Available from: Broadcast Electronics (BE), 4100 N. 24th St., Quincy, Ill., 62301 (217) 224-4700
- 1 each VT-100 dumb terminal and/or standard 286 PC with available serial port (for the network management port).
- 1 each Standard VGA computer monitor (Monitor not needed if using dumb terminals).
- Data Com remote voice card (for voice card option).
- Data Com SA-1 speaker amplifier (for voice card option).
- Speaker and power amplifier (for voice card option).
- Associated cables.

Depending on each Affiliates Engineering and Operational requirements, the network for receiving this channel can be expanded to serve multiple workstations and monitoring terminals. An extensive news network can be configured, however this should be consider to be part of a new “Broadcast LAN” which is totally separated and not connected to the IT LAN used for e-mail and other types of administration for security.

## *Multiplexer Configuration*

The DCB SR-8 data concentrator (statistical multiplexer) is used to combine up to eight asynchronous terminal devices to communicate through a single composite or network link. Asynchronous terminal devices may be dumb terminals, printers, plotters, serial computer ports, etc. Each data port is

configured individually, with network speeds up to 19.2 Kbps (RS-232). The SR multiplexer also controls the data flow to and from each terminal device. These individually configured flow control parameters may be either software controlled (Xon/Xoff) or hardware controlled through the RS-232-D interface.

## *CBD (Hardware,CTS/RTS) Flow*

The network management port allows the engineers to configure, set-up, obtain information, reconfigure and troubleshoot the SR-8. Multiplexer configuration is set through the rear panel “network management” port using a dumb terminal or PC with available serial port.

Multiplexer configurations are kept in non-volatile memory. Refer to DCB manual pages 5-3 to 5-14 for command and configuration port settings.

There are two ways to access the network management port. The first method described is recommended:

1. Connect the supplied six-foot cable to the SR network management port connector on the SR-8 and then to an asynchronous terminal. The cable has a RJ45 8-position connector, which attaches to the SR-8 and a DB-25/9 pin connector that attaches to the computer. Check pin wiring to ensure correct connections. (see Figure 7-6)
2. Use the terminal connected to port 1 as the network management access: Depress the port 1 setup switch on the front panel. The port 1 setup indicator light will turn on. To return data port 1 too normal data activity, depress the switch again.

When using the supplied network management port cable for direct connection to the network management port, the terminal should be configured for:

- 9600 bps
- 8 Data bits
- No Parity
- 1 Stop bit
- XON/XOFF

When mapping the network management port to Port 1, make sure the terminal parity and speed settings match the settings for Port 1. Factory defaults are

- 9600 bps
- 7 Data bits
- Space Parity
- 1 Stop bit
- XON/XOFF

Each synchronous port on the SR-8 should be set-up as follows

| Asynchronous Port Specifications | | |
|---|---|---|
| Data Format | 1 start bit | |
| | 8 data bits | |
| | 1 stop bit | |
| Port Rates | Channel 1 AIN/News Wires | 9600 bps |
| | Channel 2 (reserved for future use) | Not used |
| | Channel 3 NAS Data | 9600 bps |
| | Channel 5-8 (reserved for future use) | Not used |
| Port interface | RS-232-D | |
| Port Connectors | RJ45, 8-position female (jack) | |
| Port Flow Control | CBD (Hardware, CTS/RTS) | |

SR demultiplexers are designed to operate in normal office environments using standard 120 VAC power. For optimum performance, the following steps are recommended:

1. Make sure you use the power supply shipped with SR.
2. Place the SR in a location with sufficient airflow and clearance for cooling.
3. Place the SR in a location where the controls are easy to access and the indicators may be seen.
4. Place the SR in a secure position so the weight of the power supply and attached cables don't cause the unit to fall.
5. Plug the power supply into a grounded 120 VAC outlet. The outlet should be isolated from electrical equipment, which draws large amounts of current such as large electrical motors. You should consider installing UPS or surge protection.
6. Avoid placing the SR in environments where temperatures may be extremely hot or cold

Network loopback and individual port options are set through the network management port. (Refer to Section 5 of DCB manual for management port information).

Flow control options are the most critical and the most common source of installation problems. If the flow control is improperly implemented no data or data loss will occur. If you are using software flow control (Xon/Xoff) double-check the parity settings. Make sure that the parity is set the same at the CPU, remote SR and attached devices. See Section 3.2 of the DCB manual for Xon/Xoff parity setting information. Also see Section 9 for complete flow control information.

Cabling between the de-multiplexer and the computer ports or terminal devices is another common source of installation problems. Installers should carefully review section 6 of the DCB manual for proper cabling and connector pin-outs. The most common cable interfaces are illustrated in the following four figures.

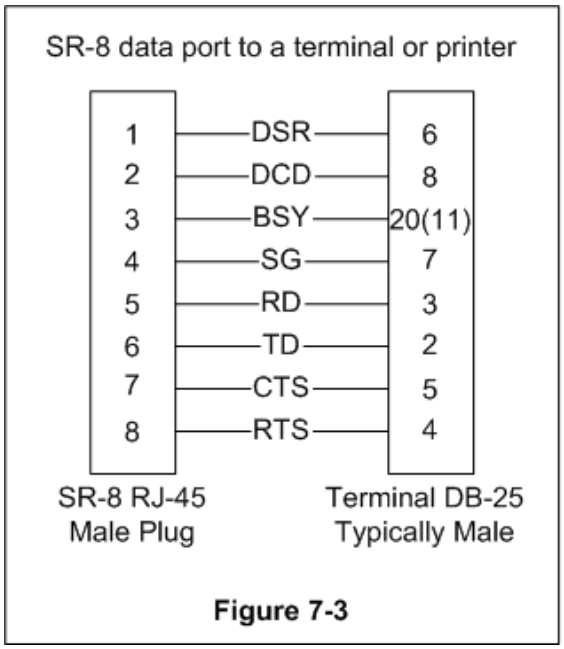


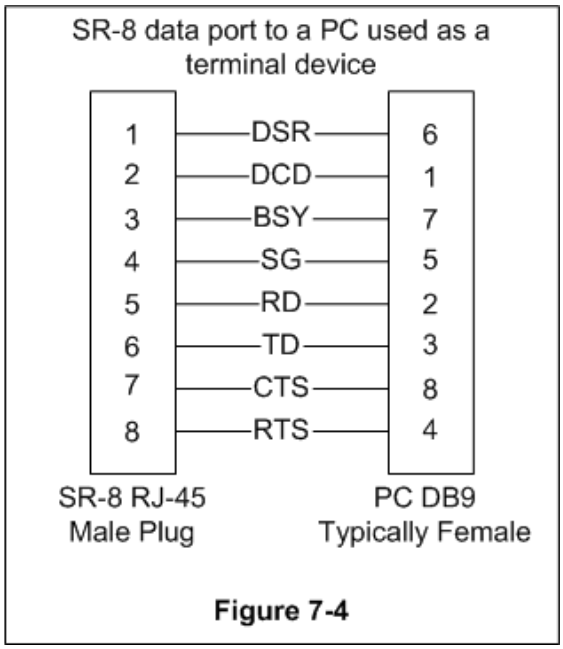


**Figure 7-3 SR-8 connection to a printer and Figure 7-4 SR-8 connection to a PC terminal device**

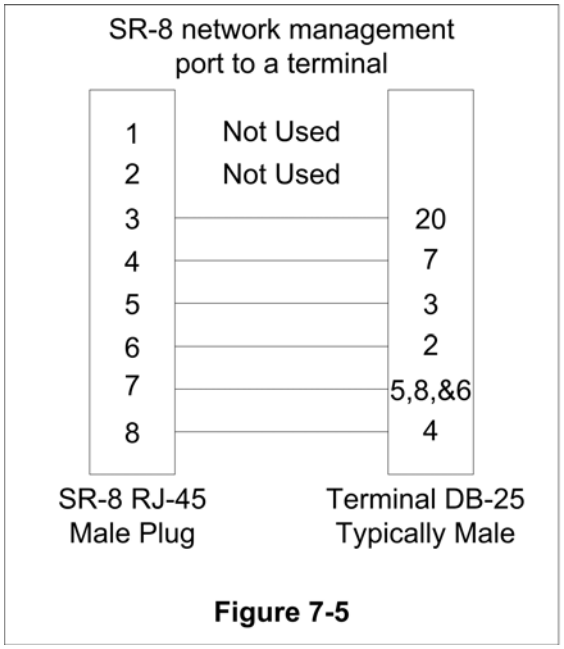


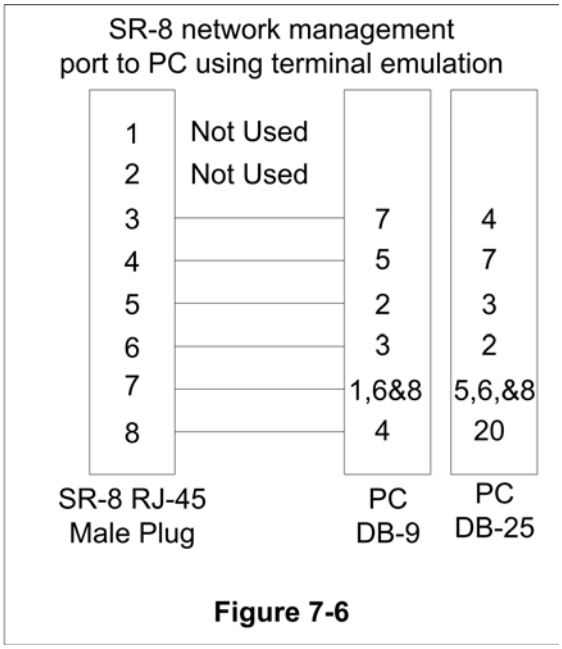


**Figure 7-5 SR-8 network management port to a terminal and**

**Figure 7-6 SR-8 network management port to a PC terminal**

The SR-8 Multiplexer operates in several different modes determined by switch selections and the state of critical RS-232-D leads.

**Loopback Mode -** This mode is activated by switch selection or through the network management port control. In loopback, the SR loops back any signals received to the originating source. Loopback is bi-directional.

**On-Line Multiplexing -** This is the normal mode of operation where all ports are active.

**Off-Line –** This mode exists when position 3 (DCD) is negative on the composite channel connector.

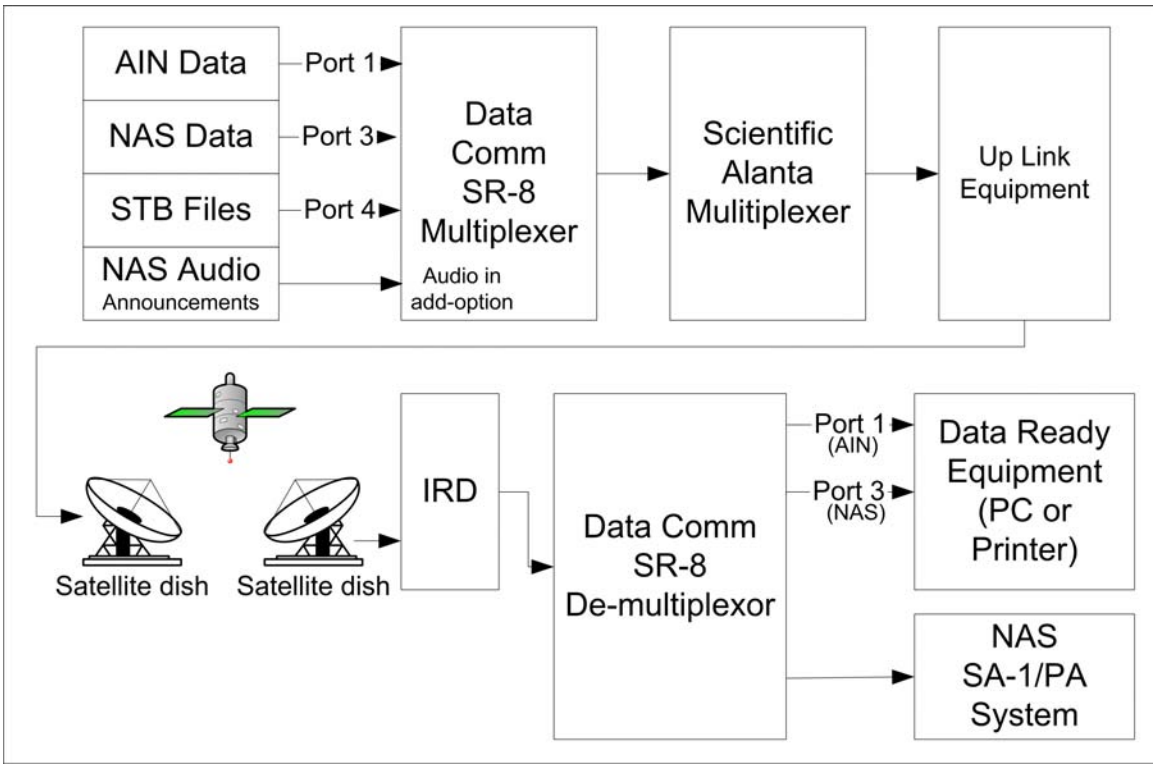


**Figure 7-7 PowerVu datacasting network**

## Quick Set-up Procedures

1. Once the SR-8 multiplexer is installed in the proper location, connect the supplied six-foot network management cable from the SR-8 network management port to the PC serial port (using terminal emulation or Dumb Terminal). Be sure to check cables for proper pin continuity based on what type of equipment you are using. (Figures 7-6) "Category 5" communication network cables are required to be used as part of this connection. Cable lengths should not exceed 100 feet without the aid of a repeater.

2. Connect the supplied 9 pin to RJ45 adapter to the 9 pin "high speed" data port on Scientific Atlanta model 9223 803-201, or 9223 803-311 IRD. Connect a "straight through" CAT05 (RJ45 to RJ45) cable from the above-mentioned adapter to the composite input port on the back of the SR8 Demultiplexer. (See figure 7-8)

**Figure 7-8 SR-8 wiring**

3.)Open “HyperTerminal” (standard on Windows 95/98/2000) or your favorite communications software. Check and modify (if necessary) the terminal or PC parity and speed settings as previously described (9600, 8, None, 1, XON\XOFF).

4.) Hit the escape key twice – fast. You should see one of the menus displayed.

5.) Type “MR1”, press enter. (Monitor Receive Port 1, AIN/News wires)

6.) You should now receive perfect data text on the network management port. (If all settings were set)

7.) Connect from output port 1 on the SR8 to your PC and/or printer to receive AIN and News Wires, output port 3 to receive the NAS Alert messages. If you do not have the “NewsBoss” software, running standard Hyper term software (standard on Windows 95/98/2000) can be used receive the data from the SR-8’s Output ports, 1-8. (See Table 7-1 for pin-out wiring)

| PIN | SIGNAL | PIN | SIGNAL |
|---|---|---|---|
| 1 | RS-422+ | 6 | RS-422- |
| 2 | Clock Out+ | 7 | Clock Out- |
| 3 | Reserved | 8 | Reserved |
| 4 | N/C | 9 | N/C |
| 5 | Signal Gnd | | |

Table 7-1 64 Kbps high-speed pin-out

Figure 7-9 is the transmit adapter from the DCB SR-8 data concentrator to the Scientific Atlanta multiplexer (transmit uplink sites only)

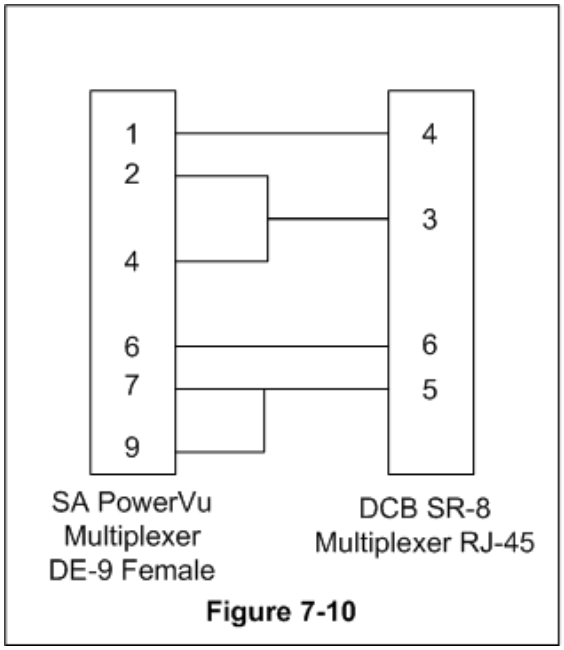


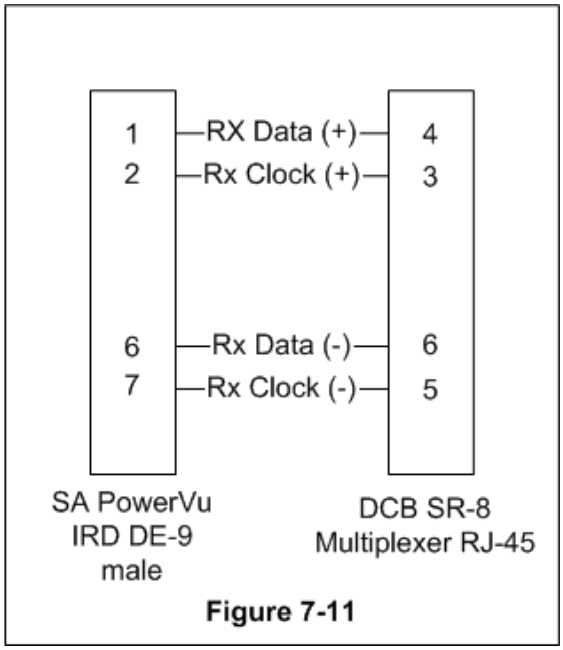


**Figure 7-9 PowerVu Multiplexer to SR-8 and Figure 7-10 PowerVu IRD to SR-8**

Connect from output port 1 on the SR8 to your PC and/or printer to receive AIN and NewsBoss, output port 3 to receive the NAS Alert messages. If you do not have the "NewsBoss" software, running standard Hypertermal software (standard on Windows 95/98/2000) can be used receive the data from the SR-8's Output ports, 1-8. (See Figure 7-11)

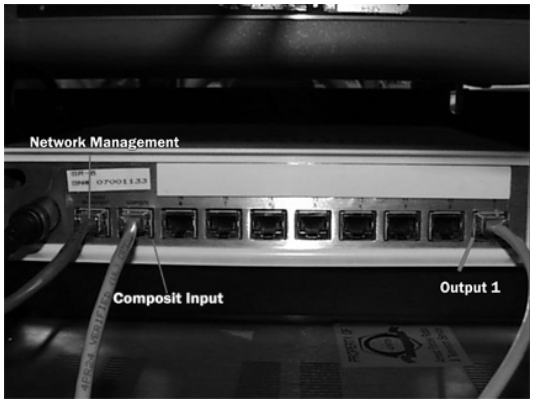


**Figure 7-11 SR-8 output ports**

## *SR-8 Commands*

The following commands can be entered into the HyperTerminal session established with an SR8 data multiplexer. Windows HyperTerminal should be set to 9600-baud, 8 data bits, no parity, 1 stop bit, and XON\XOFF flow control. After establishing the session with the SR-8 hit the escape key twice quickly to bring up the system prompt "AT YOUR COMMAND>>". Commands are listed in table 7-2, test tool commands are located in table 7-3.

| Command | Key Strokes |
|---|---|
| Show Network | SN |
| Show Configuration | SC |
| Show Voice | SV |
| Change Port Configurations | CP |
| Change Mux Parameters | CO |
| Change Voice | CV |
| Change Voice Rate | CR |
| Configure Modem | CM |
| Configure Network | CN |
| Set ID | ID |
| Activity Counters/Zero | AC/Z |
| Flow Control | FC |
| Test Tools (see other table below) | TT |
| Type | TY |
| Repeat Last Command | * |
| Disconnect Network Management Port | BYE |
| Table 7-2 SR menu commands | |

| Test Tool Command | Key Stokes |
|---|---|
| Capture Port | CA# |
| Network Loop/Quit | NL/QNL |
| Monitor Port TX | MT# |
| Monitor Port RX | MR# |
| Network Management Port Parity | P |
| Reset Mux | RESET |
| # = port number | |
| Table 7-3 Test Tool Commands | |

## *SR-8 Setup*

The data channels one though 8 should all be set to loop-off, flow control to CNB (CTS No Busy), and the data rate to 9600-baud. Audio settings can be found in table 7-4.

| Parameter | Setting |
|---|---|
| RX Gain | 0 dB |
| TX Gain | 0 dB |
| Voice Onlevel | -40 dBm |
| Voice Offlevel | -43 dBm |
| Voice on holdover | 200 msec. |
| Noise insert | Off |
| Voice rate | 6400-baud |
| Voice jitter delay | 100 msec. |
| Voice Port | 1 (E&M) |
| Table 7-4 SR-8 voice channel settings | |

## *1.544 Mbps High Speed Data Channel*

The 1.544 Mbps RS-422 high-speed data channel provides worldwide customers with “Stars and Stripes” newspaper publishing material. This information is downloaded edited and inserted into the existing publication, which is distributed to thousands of our military, civilians, and families overseas from Europe and the Far East. CD AudioVault WAV files are also combined into this channel to provide AFRTS affiliates with needed music and news The 1.544 Mbps data channel is configured on SATNET channels 10, 11, and 24. (See appendix A).

### Configuration

To receive the SATNET C-Band 1.544 Mbps data channel, you will need the following equipment as part of the your satellite reception configuration;

1) Scientific Atlanta model 9223 803-201, or 9223 803-311 IRD
2) Pentium 233 MHz ISA or faster personal computer w/ mouse
3) Video Playback Card (required for MPEG-I and/or 2)
4) 3.2 Gb HD or larger
5) 64 Mbytes or more RAM
6) 15 inch or larger SVGA Computer Monitor
7) Associated cables
8) Operators installation manual
9) Windows NT Workstation 4.0 or Windows 95
10) Fazzt Remote Station Software
11) Fazzt Data Workstation module, FZT/HSCC96-RX
12) Fazzt Type B PowerVu cable
13) Fazzt Users and installation manual
14) Adobe Acrobat Reader, Microsoft Internet Explorer, Office Suite or a Microsoft Excel viewer.

Computer technicians and engineers should refer to the personal computer and Fazzt users manual for specific installation guidelines. Figure 7-12 depicts the system’s block level configuration.

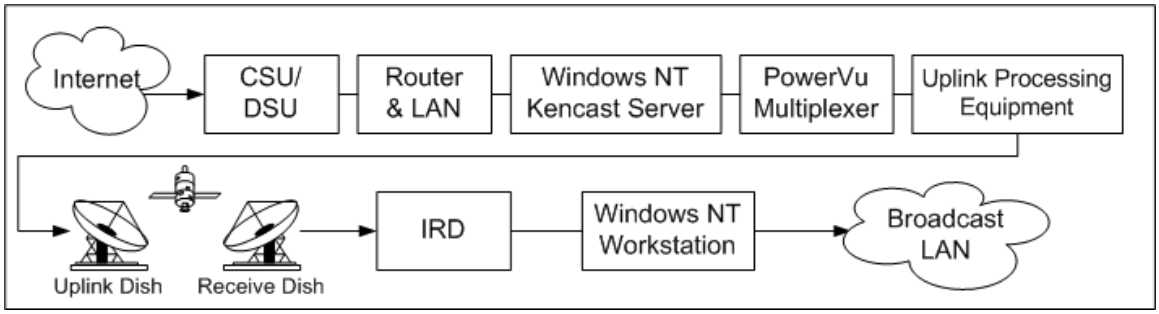


**Figure 7-12 Fazzt network**

### Cabling and Pin outs

"Category 5" communication network cables are required to be used as part of this connection. Cable lengths should not exceed 100 feet without the aid of a Ethernet repeater. Figure 7-13 shows the IRD 1.544 Mbps high speed 9-pin D-connector and Fazzt Type B, RS-422 cable pin-outs that are connected to the computer.

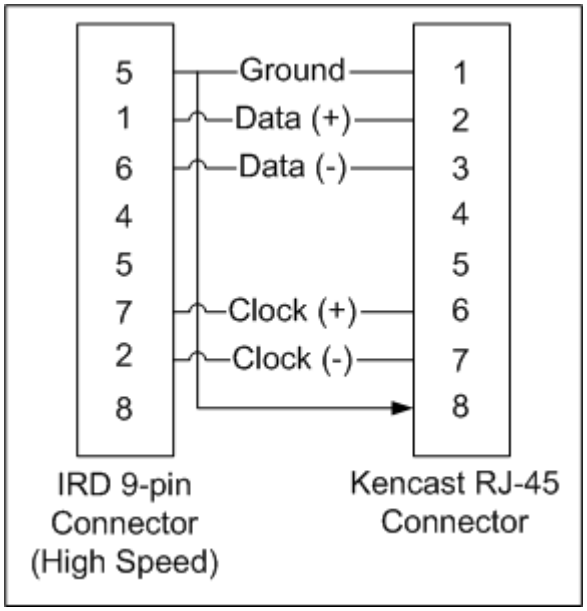


**Figure 7-13 IRD to Kencast connection**

## *Datacasting on DTS (128 Kbps High Speed Data Channel)*

The DTS 128 Kbps, RS-422 high-speed data channel is an information highway of multimedia-media, programs, newspapers, news, entertainment, art, and graphics supporting a worldwide audience. Utilizing a technology from Kencast called Fazzt, this payload consists of daily transmissions of Stripes Lite, Navy News Wire, Early Bird, Weather Charts, satellite photos and charts. Originated from various locations around the country, the data is imported into a Windows NT Fazzt Server where the data is prepared and processed for worldwide transmission. On the receive side, a Pentium II computer is connected to the IRD where files are automatically placed in a created directory "C:\Hot Folder". (The Kencast Fazzt software automatically creates this folder) The 128 Kbps data is currently configured on DTS Pacific virtual channels 201 and 202; DTS Indian Atlantic virtual channels 301 & 302 (see Chapter 3).

## *Configuration*

To receive the DTS 128 Kbps data channel, you will need the following equipment as part of the your satellite reception configuration;

1) Scientific Atlanta model 9223 803-201, or the 9223 803-311 IRD
2) Pentium 233 MHz ISA or EISA microcomputer with mouse
3) Video Playback Card (required for MPEG-I and/or 2)
4) 3.2 Gb HD or larger
5) 64 Mbytes or more RAM
6) 15 inch or better SVGA Computer Monitor
7) Associated cables
8) Operators installation manual
9) Windows NT Workstation 4.0 or Windows 95
10) Fazzt Remote Station Software
11) Fazzt Data Workstation module, FZT/HSCC96-RX
12) Fazzt Type B PowerVu cable
13) Fazzt Users and installation manual

Computer technicians and engineers should refer to the personal computer and Fazzt users manual for specific installation guidelines. Figure 7-14 depicts the system's block level configuration.

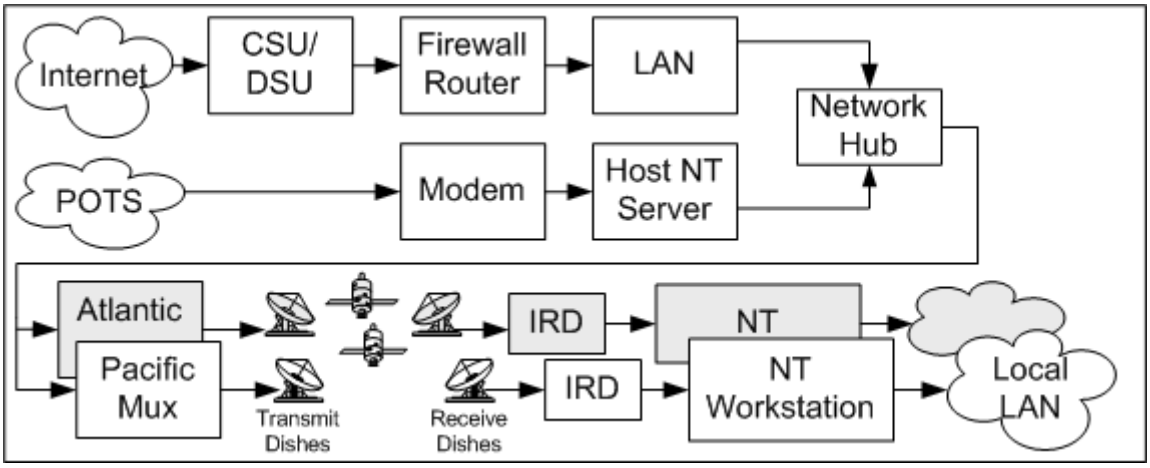


Figure 7-14 Fazzt configuration and interface.

## *Cabling and Pin outs*

"Category 5" communication network cables are required to be used as part of this connection. Cable lengths should not exceed 100 feet without the aid of a repeater. Previous Figure 7-11 shows the IRD 128 Kbps high-speed 9-pin D connector and Fazzt Type B, RS-422 cable pin-outs that are connected to the computer.

## *1.544 Mbps and 128 Kbps High Speed Data Troubleshooting Guide*

The following troubleshooting steps are provided assuming the installer has carefully reviewed associated installation and users guide material provided with each piece of equipment and has checked ALL cables for continuity to include opens/shorts between pins/wires. The installer should have also re-checked cables for a snug and tight fit.

1) The IRD is locked on the satellite signal; a steady green light on front panel is present (not flashing).
   - YES – proceed on to next step
   - NO – Refer to Chapter 4, IRD Troubleshooting Guide
2) The IRD is tuned to the right channel, referring to the virtual channel guide for your particular satellite region network located in appendix A. This can be confirmed on the model 9223 803-200, 201, 202, 204 by pushing the “Menu” button, and the then pushing “0” to display all services. If you are on the right channel, you will see an entry for HSD (high-speed data) . The model D9234 can be checked by using the remote control, by pushing “Menu”, “Satellite Services”, and then “Select”.
   - YES – proceed on to next paragraph
   - NO – Change to the correct channel
3) Most Fazzt installation problems stem from an incorrect configuration. The most common cause of installation problems is a conflict in Interrupts (IRQ). You must make sure that Fazzt’s IRQ selection is compatible with your computer. The setting must be unique. If any other device in your computer is set for the same IRQ as the Fazzt Card, it will not work.

**This is likely an interrupt problem:** You have an interrupt conflict if your computer locks up when you try to launch the Fazzt High Speed Receiver. Another sign of interrupt conflict is unusual behavior such as receiving only part of the data being transmitted (or none at all). The default IRQ is 12.

**Solution**: From the Windows Program Manager/Desktop, launch the Fazzt High Speed Receiver. Double click on the gears icon to launch the Fazzt Configuration Utility. Select another IRQ. Then try again to launch the Fazzt program. Repeat these steps, trying to find a different IRQ (11, 10, 9 etc…).

4) Make sure the Fazzt Card is well seated in the expansion slot being used.
5) Try the Fazzt Card in a different ISA slot.

6) Make sure that your port is configured for the correct address.

**This is likely port problem**: You may have a port problem if, when you launch the Fazzt Configuration Utility, you get the error message “Bimodal Interrupt Service Not Available”. If you are running under Windows NT, you can confirm that the problem is with the port by rebooting the system; then launching the “Event Viewer” in Windows “Administrative Tools” program group. If it registers a System Error “Device not detected in specified port”, you have a port problem. If you are running Windows 95, perform the solution steps anyway.

**Solution:** Remove the Fazzt Card from your PC and inspect the jumper straps. (See Fazzt Installation Step III discussion and diagram of port settings.) If the Fazzt Card has a port setting other than the default 0x120 the easiest way to remedy the inconsistency is to change the software port setting using the Fazzt Configuration Utility, to the same settings as the card. Replace the card in the slot and launch the Fazzt Configuration Utility by double clicking on the gears icon in the Fazzt High Receiver module. Alternatively, you can change the jumper straps on the card to another configuration. Try this if the 0x120 setting does not work.

## *IRD Control and Polling from a Remote Location*

Scientific Atlanta model IRD’s can be checked and controlled from remote locations. Connect a desktop or laptop computer using a modem and telephone line. See figure 7-15.

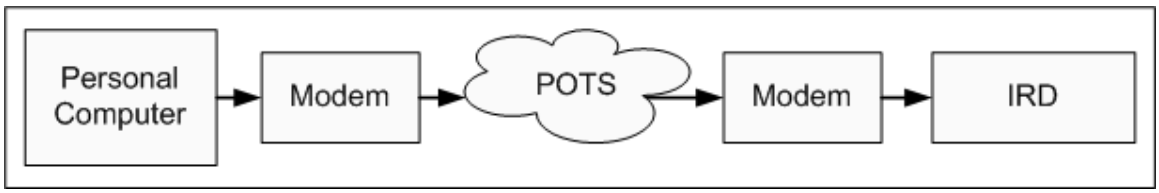


**Figure 7-15 IRD control via a PC**

Connect a standard category 3 (or 5) network cable between the modem and the IRD’s expansion port utilizing the following pin-outs for single or dual IRD polling configurations. See figures 7-16 and 7-17.

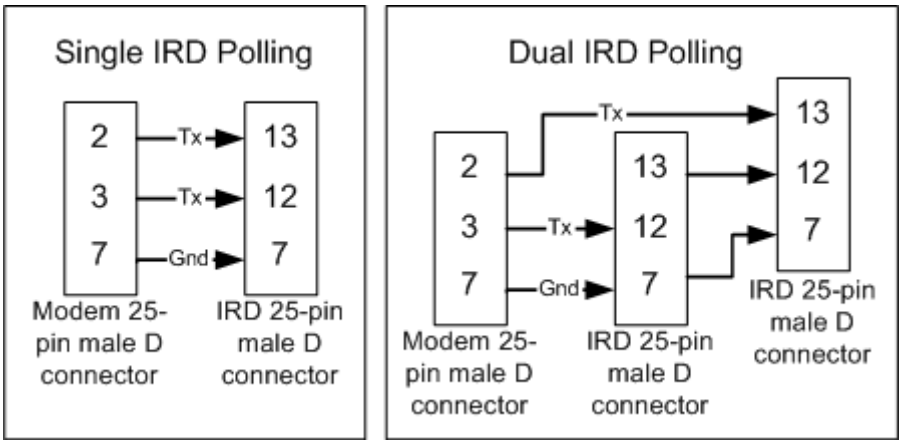


**Figure 7-16 Single IRD polling and Figure 7-17 Dual IRD polling**

Use a simple communication program like Windows HyperTerminal to control and poll the remote IRD from your computer. Listed in table 7-2 are some of the commands recognized by the IRD.

**Table 7-5 IRD polling commands**

| | |
|---|---|
| **SA1BER** | Displays current Bit Error Rate (IRD#1) |
| **SA1CCP** | Displays current CCP software version |
| **SA1DCP** | Displays current DCP software version |
| **SA1VER** | Displays type of decoder |
| **SA1CE** | Displays current corrected errors |
| **SA1UE** | Displays current uncorrected errors |
| **SA1CE=0** | Resets currents corrected errors to “0” |
| **SA1UE=0** | Resets current uncorrected errors to “0” |
| **SA1INST** | Displays all current configuration data on the IRD |
| **SA1PW=OFF** | Turns Power “off” on IRD |
| **SA1PW=ON** | Turns Power “on” |
| **SA1QLTY** | Displays current signal quality |
| **SA1AGC** | Displays current signal strength |
| **SA1CH=1** | Changes the IRD to channel One |
| To poll the #2 IRD in a dual poll configuration use SA2BER command. | |

# Chapter 8 : NewsBoss Network Alert System (NAS)

## *What is NewsBoss?*

NewsBoss is a software program designed for journalist in radio newsrooms providing them with near real-time news information. The system not only provides wire reception but database storage, word processing, audio editing, and presentation tools, all intergraded into one program. Associated Press news wire stories are received via satellite receivers at the Broadcast Center and collected and organized in the NewsBoss database. They then are automatically transmitted via PowerVu and are then available for viewing from any NewsBoss workstation. Both the server and client use an intuitive Windows interface making it easy to learn and to cut and paste news copy between the NewsBoss system and any Windows word processor.

## *What is NAS?*

NAS is the Network Alert System that is used to notify affiliates of changes to programming or of upcoming special events. Network alerts can be generated in NewsBoss and are sent out on the 64Kbps data feed over PowerVu as soon as the message is saved or closed. See chapter 7 for data port connection details. The NAS can notify affiliates of urgent and priority data via the screen or external alarm. Alerts are listed in the NAS queue and remain there for review for one week before being automatically deleted.

# Chapter 9 : Closed Caption Service

All other PowerVu channels pass the closed caption information if the program provider has incorporated it in the program. Closed caption is a depiction of the audio portion of a television program as text displayed on a television screen with the aid of a decoder that may be internal or external to the television receiver. Closed, as opposed to open, captioning means that the captions do not normally appear as part of the broadcast television picture. The viewer must have the proper equipment and select the captioning mode. Closed-captioned programs are compatible with other programs in that the addition of the captioning signal does not interfere with the regular audio and video signal. Digital data to create captions are transmitted with the television program signal on Line 21, field 1 of the vertical blanking interval, which the PowerVu encoders passes with the video stream. This signal is then received on the PowerVu receiver and transmitted by the affiliates to their viewers.

Captioned TV enables viewer to read the dialogue and narration of the programs. The technique is used to provide access to the entertainment, educational, and informational benefits a television for viewers who are deaf or hearing impaired. The captions produced by the closed captioning system generally appear in the lower portion of the television screen, Closed captioning is added in real time to a live program or added later as part of post production or distribution. AFRTS does not add or delete closed captioning to programs.

The United States Congress passed the Television Decoder Circuitry Act of 1990. This act requires that all television receivers manufactured on or after July 1, 1993 with a picture screen of 13 inches or greater must be equipped to display closed-captioned television transmission. The display of the closed caption is a customer selectable feature on the receivers.

# Chapter 10 : AFRTS Decoder Download Procedures

## *9234 Decoders*

This procedure applies to all customers who receive the AFRTS, AFN-Europe and/or DTS (Direct to Sailor) signal via satellite using a Scientific Atlanta Power-Vu model 9234 desk-top IRD (Integrated Receiver Decoder). The OS download is an out-of-service process: no video, audio or data will be available from your IRD during the download.

Carefully follow this simplified OS download procedure:

6) From the MAIN MENU, cursor up to RECEIVER STATUS and push “select.” This will access the RECEIVER STATUS menu.
7) From the RECEIVER STATUS menu, cursor up to USER SETUP and push “select.” This will access the USER SETUP menu.
8) From the USER SETUP menu, cursor up to NETWORK PRESETS and push “select.” This will access the NETWORK PRESETS menu.
9) Caution, this is an extremely important step: check the USE NIT block in this menu. It should indicate YES. If it reads NO, cursor up to the USE NIT block and press the “select” button to change it to YES.
10) Move the cursor to “exit” and push “select.” You will be prompted to save the settings: a box will appear and you will be asked to push 1 for yes, 2 for no or 3 to cancel. Press 1. Move the cursor to “exit” and press “select.” Repeat this step as prompted as you exit through all the menus. NOTE: FAILURE TO PUT YOUR DECODER IN THIS (USE NIT YES) MODE PRIOR TO PERFORMING THE NEXT PROCEDURE WILL RESULT IN THE DECODER LOCKING UP AND COULD REQUIRE FACTORY MAINTENANCE TO CORRECT THE PROBLEM.
11) With the IRD still locked to the incoming signal, tune the IRD to any channel.
12) After the IRD locks on a channel, simply press the ON/STANDBY button on the front of the IRD. The IRD will determine whether it needs an OS download.
13) If the IRD does not need an OS download, it simply shuts off when the ON/STANDBY button is pressed. Pressing the ON/STANDBY button again will turn the IRD back on.
14) If the IRD determines it needs an OS download, it will begin the download process automatically. This procedure will take up to 15 minutes for each decoder requiring an OS download.
15) Once the OS download is completed, the IRD will return back “ON” to the channel previously selected.

Should you encounter problems with this process, please contact AFRTS-Broadcast Center at commercial (909) 413-2339 or DSN 348-1339, or email dee@dodmedia.osd.mil

## *9223 Decoders*

This procedure applies to all customers that receive AFRTS, AFN Europe, or DTS (Direct to Sailors) programming via satellite using the Scientific Atlanta 9223 Commercial type IRD (Integrated Receiver Decoder). The following simple procedure will guide you in downloading new software to update your decoder. Note: OS Download is an out of service process – no video, audio, or data programming will be available from an IRD during a download.

## *How can I tell if I need an OS download?*

On any one of the model 9223 commercial IRDs, press the MENU button on the front of the IRD. The DECODER VERSIONS line on the main menu shows the Display Control Processor (DCP) software version. The DCP and CCP are loaded, as a separate file, which means two separate OS downloads must take place. If the IRD has the latest version of either processor, then only one download is needed.

Carefully follow this simplified OS download procedure:

1. With the IRD locked to the incoming AFRTS, AFN Europe, or DTS satellite signal simply press the On/Standby button on the front of the IRD. Wait approximately 10 minutes. The IRD will automatically download the required software.
2. Press the On/Standby button on the front of the IRD a second time. Wait approximately 10 minutes. The IRD will automatically download the required software if needed.
3. After the ON/STANDBY or STANDBY button has been pressed, the IRD will determine whether it needs an OS Download and begin the process automatically. This procedure will take up to 10 minutes for each OS download. Once the OS download is completed, the IRD will return back “On” to the channel previously selected. If the IRD does not need an OS download, it simply shuts off when the ON/STANDBY or STANDBY button is pressed.

Should problems be encountered with this process, please contact AFRTS-BC at (909) 413-2339, DSN 348-1339, or e-mail at dee@dodmedia.osd.mil.

## *How to read PowerVu decoder TIDs*

The TID for all decoders is comprised of 12 digits broken down into the following meanings.

**Digit 1.** Refers to the last digit of the year i.e. “0” for 2000, “1” for 2001 etcetera up to “4” for 2004. If 5 to 9 are present then these were manufactured in 1995 through 1999 respectively. The TIDs will be revisited in the future to accommodate 2005 etc.

**Digits 2 & 3.** Refer to the week of the year from 01 to 52.

**Digits 4 & 5.** Refer to the particular model of decoder as follows.

- 76 for the D9223 Commercial Receiver
- 87 for the D9224 Professional Satellite Receiver
- 79 for the D9225 Headend Satellite Receiver (HESR)
- 89 for the D9228 Multiple Decryption Receiver (MDR)
- 90 for the D9229 Commercial Headend Receiver
- 97 for the D9230 Master Control Receiver (MCR)
- 78 for the D9234 Business Satellite Receiver (BSR – including BSR Lite)
- 88 for the D9235 Digital Satellite Receiver (DSR)

**Digit 6.** Refers to the country of manufacture where ‘ 0 ‘ is Canada and ‘ 1 ‘ is for Korea.

**Digits 7 – 12.** Are effectively the serial numbers of the unit.

# Appendixes

**Appendix A: Virtual Channel Listings**

Television and Radio Channels AFRTS-BC

Television and Radio Channels AFNE

Data Channels AFRTS-BC

Data Channels AFNE

**Appendix B: Technical Reference**

RF link budget

C-Band Link Budget

Ku-Band Link Budget

DTS-Band Link Budget

**Appendix C: Dish pointing data**

**Appendix D: AFRTS Satellite Information**

# Appendix *A: Virtual Channel Listings*

## AFRTS Channel Guide

Current as of January 2003

| *Service* | *Channel* | *Video* | *Audio 1* | *Audio 2* | *Audio 3* | *Audio 4* |
|---|---|---|---|---|---|---|
| AFRTS-BC | 01 | AFN Sports | AFN Sports | ESPN Radio | FOX Sports Talk | Contingency |
| AFRTS-BC | 02 | AFN Atlantic | AFN Atlantic | Hot AC | Z-Rock (ABC) | NPR |
| AFRTS-BC | 03 | AFN Spectrum | AFN Spectrum | The Touch | Contingency | UI Voiceline |
| AFRTS-BC | 04 | AFN Pacific | AFN Pacific | Pure Gold | None | None |
| AFRTS-BC | 05 | AFN News | AFN News | Bright AC | Country | Adult Rock |
| AFRTS-BC | 06 | AFN Korea | AFN Korea | Time code | None | None |
| AFRTS-BC | 07 | AFN Program Guide | UI Voice Channel | Hot AC | News Wheel | Voiceline |
| AFRTS-BC | 08 | Pentagon Channel | Pentagon Channel | None | None | None |
| AFRTS-BC | 09 | Future AFN | Future AFN | None | None | None |
| AFRTS-BC | 10 | Engineering Channel | 1 KHz tone | 1 KHz tone | 1 KHz tone | 1 KHz Tone |
| AFRTS-BC | 11 | AFN Atlantic | AFN Atlantic | Hot AC | Z-Rock (ABC) | NPR |
| AFRTS-BC | 12 | AFN Atlantic | AFN Atlantic | Hot AC | Z-Rock (ABC) | NPR |
| AFRTS-BC | 13 | AFN Atlantic | AFN Atlantic | Hot AC | Z-Rock (ABC) | NPR |
| AFRTS-BC | 14 | AFN Atlantic | AFN Atlantic | Hot AC | Z-Rock (ABC) | NPR |
| AFRTS-BC | 20 | AFN Program Guide | Newswheel | None | None | None |
| AFRTS-BC | 21 | AFN Program Guide | Bright AC | None | None | None |
| AFRTS-BC | 22 | AFN Program Guide | Country | None | None | None |
| AFRTS-BC | 23 | AFN Program Guide | Adult Rock | None | None | None |
| AFRTS-BC | 24 | AFN Program Guide | NPR | None | None | None |
| AFRTS-BC | 25 | AFN Program Guide | Voiceline | UI Voiceline | Split UI Voiceline | None |
| AFRTS-BC | 26 | AFN Program Guide | UI Voiceline | Split UI Voiceline | Voiceline | None |
| AFRTS-BC | 27 | AFN Program Guide | The Touch | None | None | None |
| AFRTS-BC | 28 | AFN Program Guide | Pure Gold | None | None | None |
| AFRTS-BC | 29 | AFN Program Guide | Hot AC | None | None | None |
| AFRTS-BC | 30 | AFN Program Guide | Z-Rock (ABC) | None | None | None |
| AFRTS-BC | 31 | AFN Program Guide | ESPN Radio | None | None | None |
| AFRTS-BC | 32 | AFN Program Guide | FOX Sports Talk | None | None | None |

| ***Service*** | ***Channel*** | ***Video*** | ***Audio 1*** | ***Audio 2*** | ***Audio 3*** | ***Audio 4*** |
|---|---|---|---|---|---|---|
| AFRTS-BC | 33 | AFN Program Guide | U/I Split Voiceline | U/I Split Voiceline | Voiceline | None |
| AFRTS-BC | 34 | AFN Program Guide | SMPTE Timecode | None | None | None |
| AFRTS-BC | 35 | AFN Program Guide | Backhaul to Japan | None | None | None |
| AFRTS-BC | 36 | AFN Program Guide | Contingency | None | None | None |

# Virtual Channel Listings

## AFNE Channel Guide

| *Service* | *Channel* | *Video* | *Audio 1* | *Audio 2* | *Audio 3* | *Audio 4* |
|---|---|---|---|---|---|---|
| AFNE | 01 | AFN Sports | AFN Sports | ESPN Radio | Fox Sports Talk | Contingency |
| AFNE | 02 | AFN Atlantic Region 1 | AFN Atlantic | AFN Power Radio | AFNE Z-Rock | NPR |
| AFNE | 03 | AFN Spectrum | AFN Spectrum | The Touch | Contingency | None |
| AFNE | 04 | AFN Pacific | AFN Pacific | Pure Gold | None | None |
| AFNE | 05 | AFN News | AFN News | Bright AC | Country | Adult rock |
| AFNE | 06 | AFN Korea | AFN Korea | Timecode | None | None |
| AFNE | 07 | AFN Program Guide | ARNE Power Radio | Hot AC | Newswheel | Voiceline |
| AFNE | 08 | Pentagon Channel | Pentagon Channel | Z-Rock (ABC) | UI Voiceline | Bavaria Z FM |
| AFNE | 09 | Future AFN | Future AFN | None | None | None |
| AFNE | 10 | Color Bars | 1 KHz tone | 1 KHz tone | 1 KHz tone | 1 KHz tone |
| AFNE | 11 | AFN Atlantic Affiliate #2 Balkans | AFN Atlantic | Bavaria Z FM | AFNE Power Radio | AFNE Z-Rock |
| AFNE | 12 | AFN Atlantic Region #3 | AFN Atlantic | None | None | None |
| AFNE | 13 | AFN Atlantic Region #4 | AFN Atlantic | None | None | None |
| AFNE | 14 | Future AFN | Future AFN | 1 KHz tone | 1 KHz tone | 1 KHz tone |
| AFNE | 20 | AFN Program Guide | Newswheel | None | None | None |
| AFNE | 21 | AFN Program Guide | Bright AC | None | None | None |
| AFNE | 22 | AFN Program Guide | Country | None | None | None |
| AFNE | 23 | AFN Program Guide | Adult Rock | None | None | None |
| AFNE | 24 | AFN Program Guide | NPR | None | None | None |
| AFNE | 25 | AFN Program Guide | Voiceline | UI Voiceline | Split UI Voiceline | None |
| AFNE | 26 | AFN Program Guide | UI Voiceline | Split UI Voiceline | Voiceline | None |
| AFNE | 27 | AFN Program Guide | The Touch | None | None | None |
| AFNE | 28 | AFN Program Guide | Pure Gold | None | None | None |
| AFNE | 29 | AFN Program Guide | Hot AC | None | None | None |
| AFNE | 30 | AFN Program Guide | Z-Rock (ABC) | None | None | None |
| AFNE | 31 | AFN Program Guide | ESPN Radio | None | None | None |
| AFNE | 32 | AFN Program Guide | Fox Sports Talk | None | None | None |

| *Service* | *Channel* | *Video* | *Audio 1* | *Audio 2* | *Audio 3* | *Audio 4* |
|---|---|---|---|---|---|---|
| AFNE | 33 | AFN Program Guide | UI Split Voice | UI Voiceline | Voiceline | None |
| AFNE | 34 | AFN Program Guide | SMPTE time code | None | None | None |
| AFNE | 35 | AFN Program Guide | AFNE Power Radio | None | None | None |
| AFNE | 36 | AFN Program Guide | Contingency | None | None | None |
| AFNE | 37 | AFN Program Guide | AFNE Z-Rock | None | None | None |
| AFNE | 38 | AFN Program Guide | Bavaria Z FM | Bavaria Power-net AM | None | None |
| AFNE | 39 | AFN Program Guide | Bavaria Power-net AM | Bavaria Z FM | None | None |

## DTS Virtual Channel Guide

| *Service* | *Channel* | *Video* | *Audio 1* | *Audio 2* | *Audio 3* | *Audio 4* |
|---|---|---|---|---|---|---|
| DTS Pacific | 201 | Entertainment | Entertainment | Music Service 1 | None | None |
| DTS Pacific | 202 | News | News | Voice Line | None | None |
| DTS Pacific | 203 | Sports | Sports | Music Service 2 | None | None |
| DTS Atlantic | 301 | Entertainment | Entertainment | Music Service 1 | None | None |
| DTS Atlantic | 302 | News | News | Voice Line | None | None |
| DTS Atlantic | 303 | Sports | Sports | Music Service 2 | None | None |

Data Services for DTS are 128 Kb/sec High Speed data on every channel. See next page for AFRTS and AFNE data services.

# *Virtual Channel Guide for Data Services*

## AFRTS Channel Guide

Current as of Nov 2002

| *Service* | *Channel* | *Expansion Port (Service)* | *High Speed Data (Service)* |
|---|---|---|---|
| AFRTS-BC | 01 | 9.6 Kbps, RS-232 data channel | None |
| AFRTS-BC | 02 | 9.6 Kbps, RS-232 data channel | 1.544 Mbps, RS-422 data channel (Stars and Stripes) |
| AFRTS-BC | 03 | 9.6 Kbps, RS-232 data channel | 128 Kbps, RS-422 data channel (AFN DTS) |
| AFRTS-BC | 04 | 9.6 Kbps, RS-232 data channel (time code) | 64 Kbps, RS-422 data channel (DCB Mux) |
| AFRTS-BC | 05 | 9.6 Kbps, RS-232 data channel (time code) | None |
| AFRTS-BC | 06 | 9.6 Kbps, RS-232 data channel (time code) | 1.544 Mbps, RS-422 data channel (Stars and Stripes) |
| AFRTS-BC | 07 | 9.6 Kbps, RS-232 data channel (time code) | 64 Kbps, RS-422 data channel (DCB Mux) |
| AFRTS-BC | 08 | 9.6 Kbps, RS-232 data channel (time code) | 64 Kbps, RS-422 data channel (DCB Mux) |
| AFRTS-BC | 09 | 9.6 Kbps, RS-232 data channel (time code) | 128 Kbps, RS-422 data channel (AFN DTS) |
| AFRTS-BC | 10 | 9.6 Kbps, RS-232 data channel (time code) | None |
| AFRTS-BC | 11 | 9.6 Kbps, RS-232 data channel (time code) | None |
| AFRTS-BC | 12 | 9.6 Kbps, RS-232 data channel (time code) | None |
| AFRTS-BC | 13 | 9.6 Kbps, RS-232 data channel (time code) | None |
| AFRTS-BC | 14 | 9.6 Kbps, RS-232 data channel (time code) | None |
| AFRTS-BC | 20 | 9.6 Kbps, RS-232 data channel (time code) | None |
| AFRTS-BC | 21 | 9.6 Kbps, RS-232 data channel (time code) | None |
| AFRTS-BC | 22 | 9.6 Kbps, RS-232 data channel (time code) | None |
| AFRTS-BC | 23 | 9.6 Kbps, RS-232 data channel (time code) | None |
| AFRTS-BC | 24 | 9.6 Kbps, RS-232 data channel (time code) | None |
| AFRTS-BC | 25 | 9.6 Kbps, RS-232 data channel (time code) | None |
| AFRTS-BC | 26 | 9.6 Kbps, RS-232 data channel (time code) | None |
| AFRTS-BC | 27 | 9.6 Kbps, RS-232 data channel (time code) | None |
| AFRTS-BC | 28 | 9.6 Kbps, RS-232 data channel (time code) | None |
| AFRTS-BC | 29 | 9.6 Kbps, RS-232 data channel (time code) | None |
| AFRTS-BC | 30 | 9.6 Kbps, RS-232 data channel (time code) | None |
| AFRTS-BC | 31 | 9.6 Kbps, RS-232 data channel (time code) | None |
| AFRTS-BC | 32 | 9.6 Kbps, RS-232 data channel (time code) | None |
| AFRTS-BC | 33 | 9.6 Kbps, RS-232 data channel (time code) | None |
| AFRTS-BC | 34 | 9.6 Kbps, RS-232 data channel (time code) | None |
| AFRTS-BC | 35 | 9.6 Kbps, RS-232 data channel (time code) | None |

# Virtual Channel Guide for Data Services

## AFNE Channel Guide

| *Service* | *Channel* | *Expansion Port (Service)* | *High Speed Data (Service)* |
|---|---|---|---|
| AFNE | 01 | 9.6 Kbps, RS-232 data channel (time code) | None |
| AFNE | 02 | 9.6 Kbps, RS-232 data channel (time code) | 1.544 Mbps, RS-422 data channel (ADNET) |
| AFNE | 03 | 9.6 Kbps, RS-232 data channel (time code) | 128 Kbps, RS-422 data channel (AFN DTS) |
| AFNE | 04 | 9.6 Kbps, RS-232 data channel (time code) | 64 Kbps, RS-422 data channel (DCB Mux) |
| AFNE | 05 | 9.6 Kbps, RS-232 data channel (time code) | 1.544 Mbps, RS-422 data channel (ADNET) |
| AFNE | 06 | 9.6 Kbps, RS-232 data channel (time code) | None |
| AFNE | 07 | 9.6 Kbps, RS-232 data channel (time code) | 64 Kbps, RS-422 data channel (DCB Mux) |
| AFNE | 08 | 9.6 Kbps, RS-232 data channel (time code) | 64 Kbps, RS-422 data channel (DCB Mux) |
| AFNE | 09 | 9.6 Kbps, RS-232 data channel (time code) | 128 Kbps, RS-422 data channel (AFN DTS) |
| AFNE | 10 | 9.6 Kbps, RS-232 data channel (time code) | None |
| AFNE | 11 | 9.6 Kbps, RS-232 data channel (time code) | 64 Kbps, RS-422 data channel (DCB Mux) |
| AFNE | 12 | 9.6 Kbps, RS-232 data channel (time code) | 1.544 Mbps, RS-422 data channel (ADNET) |
| AFNE | 13 | 9.6 Kbps, RS-232 data channel (time code) | 1.544 Mbps, RS-422 data channel (ADNET) |
| AFNE | 14 | 9.6 Kbps, RS-232 data channel (time code) | 1.544 Mbps, RS-422 data channel (ADNET) |
| AFNE | 20 | 9.6 Kbps, RS-232 data channel (time code) | None |
| AFNE | 21 | 9.6 Kbps, RS-232 data channel (time code) | None |
| AFNE | 22 | 9.6 Kbps, RS-232 data channel (time code) | None |
| AFNE | 23 | 9.6 Kbps, RS-232 data channel (time code) | None |
| AFNE | 24 | 9.6 Kbps, RS-232 data channel (time code) | None |
| AFNE | 25 | 9.6 Kbps, RS-232 data channel (time code) | None |
| AFNE | 26 | 9.6 Kbps, RS-232 data channel (time code) | None |
| AFNE | 27 | 9.6 Kbps, RS-232 data channel (time code) | None |
| AFNE | 28 | 9.6 Kbps, RS-232 data channel (time code) | None |
| AFNE | 29 | 9.6 Kbps, RS-232 data channel (time code) | None |
| AFNE | 30 | 9.6 Kbps, RS-232 data channel (time code) | None |
| AFNE | 31 | 9.6 Kbps, RS-232 data channel (time code) | None |
| AFNE | 32 | 9.6 Kbps, RS-232 data channel (time code) | None |
| AFNE | 33 | 9.6 Kbps, RS-232 data channel (time code) | None |
| AFNE | 34 | 9.6 Kbps, RS-232 data channel (time code) | None |
| AFNE | 35 | 9.6 Kbps, RS-232 data channel (time code) | None` |
| AFNE | 36 | 9.6 Kbps, RS-232 data channel (time code) | None |
| AFNE | 37 | 9.6 Kbps, RS-232 data channel (time code) | None |
| AFNE | 38 | 9.6 Kbps, RS-232 data channel (time code) | None |

## *Appendix B: RF Link Budgets*

**SATNET**: The following technical information is presented to assist personnel who operate SATNET satellite reception systems. The information presented is for reference purposes only; for assistance with actual satellite design requirements for your location, please contact HQ AFRTS or AFRTS-BC engineering.

**DTS**: The following technical information is presented to assist personnel who operate DTS satellite reception systems both aboard ship and at land based locations. The information presented is for reference purposes only; for assistance with actual satellite design requirements for your location, please contact AFRTS. For DTS shipboard applications please contact Naval Media Center, Washington, DC, or the Space and Naval Warfare Systems Command, San Diego, CA.

**RF Link Budgets:** An RF link budget is primarily a series of calculations that determine the signal loss between a satellite transmitter and a given earth station or receive antenna. The main consideration in these calculations is downlink carrier-to-noise density ($C/N_O$) which is represented by equation (1):

$C/N_O$ = EIRP – PL + G/T + 228.6 (1)

Where:

EIRP = Satellite's Effective Isotropic Radiated Power expressed in dBW. The satellite operator specifies this figure. For the SATNET and DTS C-Band Service, in the POR, AOR, the EIRP is 29 dBW, and the SATNET Ku-Band Service's EIRP is 47.7 dBW.

PL = Path Loss expressed in dB. This is the free space dissipation of the satellite's transmitted power as a function of distance. The PL calculation is shown in equation (2) below.

G/T = Earth station figure of merit expressed in dB/K. The G/T calculation is shown in equation (3) below.

228.6 = Boltzmann's constant expressed in dB/K/Hz.

PL = 185.0 + 10LOG[1-(0.295 CosH CosAL)] + 20LOG(Frequency in GHz) (2)

Where:

H = Earth station latitude

AL = Difference in longitude of the satellite and the earth station

G/T = Net Antenna Gain – 10LOG(System Noise Temperature) (3)

Where:

Net Antenna Gain = antenna gain – waveguide losses – coupler mismatch losses

System Noise Temperature = LNB noise temperature + antenna noise temperature + VSWR noise contribution and mismatch loss + interface waveguide noise.

## Typical SATNET C-Band Link Budget

| Conditions | |
|---|---|
| Beam type | Global Beam |
| Antenna Size (Rx) | 4.5 M |
| Antenna Size (Tx) | 18 M |
| Symbol Rate | 28.0 Msym/sec |
| Usable Information Rate | 42.58 Mbps |
| Reed-Solomon Inner Coding | 188/204 |
| Coding Rate | ¾ |

| Parameter | Uplink Values | Downlink Values | Units |
|---|---|---|---|
| I. Uplink | | | |
| Earth Station EIRP | 80.4 | | dBW |
| Pointing Loss | 0.5 | | dB |
| Path Loss | 200.2 | | dB |
| Rain Attenuation | 0.1 | | dB |
| Isotropic Antenna Area | 37.0 | | $dB/m^2$ |
| SFD at Beam Edge | -83.0 | | $dBW/ m^2$ |
| G/T at Beam Edge | -10.0 | | dB/K |
| Uplink Thermal C/N | 23.3 | | dB |
| Uplink IM EIRP Density | 10.0 | | dBW/4kHz |
| Uplink Intermodulation C/N | 31.5 | | dB |
| Total Uplink C/(N+I) | 22.7 | | dB |
| II. Transponder IM Noise | | | |
| IMP Density at Beam Edge | -36.0 | | dBW/4kHz |
| C/IM | 23.3 | | dB |
| III. Downlink | | | |
| Beam Edge XPDR EIRP | | 29 | dBW |
| Path Loss | | 196.3 | dB |
| Earth Station G/T | | 24.2 | dB/K |
| Downlink Thermal C/N | | 7.3 | dB |
| IV. Co-Channel Interference | | 30.0 | dB |
| V. Total C/(N+I) Noise | | | |
| Total C/(N+I) | | 9.3 | dB |
| $C/(N_O + I_O)$ Total | | 81.78 | dB-Hz |
| Information Rate in dB | | 76.29 | dB |
| $E_b/N_O$ Total | | 7.86 | dB |
| $E_b/N_O$ Required | | 5.5 | dB |
| Link Margin | | 2.4 | dB |

## Typical SATNET Ku-Band Link Budget

| Conditions | |
|---|---|
| Beam type | Spot |
| Antenna Size (Rx) | 1.8 M |
| Antenna Size (Tx) | 9.0 M |
| Symbol Rate | 17.18 Msym/sec |
| Usable Information Rate | 20.00 Mbps |
| Reed-Solomon Inner Coding | 188/204 |
| Coding Rate | ¾ |

| Parameter | Uplink Values | Downlink Values | Units |
|---|---|---|---|
| I. Uplink | | | |
| Earth Station EIRP | 73.2 | | dBW |
| Pointing Loss | 0.5 | | dB |
| Path Loss | 207.1 | | dB |
| Rain Attenuation | 0.1 | | dB |
| Isotropic Antenna Area | 44.4 | | $dB/m^2$ |
| SFD at Beam Edge | -90.0 | | $dBW/ m^2$ |
| G/T at Beam Edge | 0.0 | | dB/K |
| Uplink Thermal C/N | 19.3 | | dB |
| Uplink IM EIRP Density | 10.0 | | dBW/4kHz |
| Uplink Intermodulation C/N | 24.3 | | dB |
| Total Uplink C/(N+I) | 18.1 | | dB |
| II. Transponder IM Noise | | | |
| IMP Density at Beam Edge | -36.0 | | dBW/4kHz |
| C/IM | 40.5 | | dB |
| III. Downlink | | | |
| Beam Edge XPDR EIRP | | 43.3 | dBW |
| Path Loss | | 205.1 | dB |
| Earth Station G/T | | 23.1 | dB/K |
| Downlink Thermal C/N | | 14.9 | dB |
| IV. Co-Channel Interference | | 30.0 | dB |
| V. Total C/(N+I) Noise | | | |
| Total C/(N+I) | | 12.9 | dB |
| $C/(N_O + I_O)$ Total | | 87.77 | dB-Hz |
| Information Rate in dB | | 24.0 | dB |
| $E_b/N_O$ Total | | 11.48 | dB |
| $E_b/N_O$ Required | | 5.5 | dB |
| Link Margin | | 6.0 | dB |

## DTS Link Calculations

| Conditions | |
|---|---|
| Beam type | Global Beam |
| Antenna Size (Rx) | 1.2 M |
| Antenna Size (Tx) | 11 M |
| Symbol Rate | 3.68 Msym/sec |
| Usable Information Rate | 4.52 Mbps |
| Reed-Solomon Inner Coding | 188/204 |
| Coding Rate | 2/3 |

| Parameter | Uplink Values | Downlink Values | Units |
|---|---|---|---|
| I. Uplink | | | |
| Earth Station EIRP | 81.5 | | dBW |
| Pointing Loss | 0.5 | | dB |
| Path Loss | 200.0 | | dB |
| Rain Attenuation | 0.0 | | dB |
| Isotropic Antenna Area | 37.0 | | $dB/m^2$ |
| SFD at Beam Edge | -82.0 | | $dBW/ m^2$ |
| G/T at Beam Edge | -12.0 | | dB/K |
| Uplink Thermal C/N | 31.9 | | dB |
| Uplink IM EIRP Density | 10.0 | | dBW/4kHz |
| Uplink Intermodulation C/N | 41.9 | | dB |
| Total Uplink C/(N+I) | 31.5 | | dB |
| II. Transponder IM Noise | | | |
| IMP Density at Beam Edge | -36.0 | | dBW/4kHz |
| C/IM | 35.4 | | dB |
| III. Downlink | | | |
| Beam Edge XPDR EIRP | | 29.0 | dBW |
| Path Loss | | 196.7 | dB |
| Earth Station G/T | | 12.0 | dB/K |
| Downlink Thermal C/N | | 7.3 | dB |
| IV. Co-Channel Interference | | 30.0 | dB |
| V. Total C/(N+I) Noise | | | |
| Total C/(N+I) | | 7.3 | dB |
| $C/(N_O + I_O)$ Total | | 72.9 | dB-Hz |
| Information Rate | | 66.55 | dB |
| $E_b/N_O$ Total | | 6.37 | dB |
| $E_b/N_O$ Required | | 5.0 | dB |
| Link Margin | | 1.4 | dB |

## *Appendix C: Dish Pointing Data (using magnetic north)*

| **AFRICA, MIDDLE EAST, SW ASIA Country, City** | **LAT LOG Magnetic Variation:** | **Satellite** | **Type :** | **Polarization :** | **Location:** | **Mag Azimuth:** | **Elevation:** |
|---|---|---|---|---|---|---|---|
| **Afghanistan,** Kabul | 34.35N 69.12E MV 13.5E | HOTBIRD 4 | KU | V | 13.0E | 206.8 | 10.8 |
| | | INTELSAT 906 | C | LHC | 64.1E | 135.1 | 9.4 |
| **Algeria**, Alger | 28.00N 3.00E MV:2.01W | INTELSAT 906 | C | LHC | 64.0 E | 106.59 | 17.03 |
| " | | HOTBIRD 4 | KU | V | 13.0 E | 160.5 | 55.5 |
| " | | INTELSAT 707 | C | RHC | 359 E | 190.48 | 57.02 |
| " | | NSS-7 | C | LHC | 338.0 E | 225.8 | 47.3 |
| **Azerbaijan**, Baku | 40.23 N 39.51 E MV: 4.95 E | HOTBIRD 4 | KU | V | 13.0 E | 213.2 | 36.1 |
| **Bahrain**, Manama | 26.13N 50.35 E MV:2.12E | INTELSAT 906 | C | LHC | 64.0 E | 149.01 | 55.88 |
| " | | HOTBIRD 4 | KU | V | 13.0 E | 237.9 | 38.8 |
| " | | INTELSAT 707 | C | RHC | 359 E | 248.48 | 26.32 |
| " | | NSS-802 | C | LHC | 338.0 E | 259.9 | 7.2 |
| **Bangladesh**, Dhaka | 24.00N 90.25E MV: 56W | INTELSAT 906 | C | LHC | 64.0 E | 231.05 | 49.37 |
| **Cameroon**, Yaounde | 6.00 N 12.00 E MV: 2.79 W | INTELSAT 906 | C | LHC | 64.0 E | 96.6 | 25.0 |
| " " | | NSS-802 | C | LHC | 338.0 E | 263.4 | 50.0 |
| **British Indian Ocean Territory**, Diego Garcia | 7.26 S 72.37 E MV: 7.59W | INTELSAT 906 | C | LHC | 64.0 E | 318.25 | 76.99 |
| " | | INTELSAT 707 | C | RHC | 359 E | 279.75 | 7.88 |
| **Djibouti,** Djibouti | 11.30 N 43.00 E MV: 1.07 E | INTELSAT 906 | C | LHC | 64.0E | 114.91 | 61.33 |
| " | | NSS-7 | C | LHC | 338.0 E | 263.4 | 16.1 |
| " | | INTELSAT 707 | C | RHC | 359 E | 257.46 | 38.02 |
| **Egypt**, Cairo | 30.50 N 31.00 E MV: 2.61 E | INTELSAT 906 | C | LHC | 64.0E | 125.40 | 39.58 |
| " | | HOTBIRD 4 | KU | V | 13.0E | 209.9 | 49.4 |
| " | | INTELSAT 707 | C | RHC | 359 E | 228.31 | 40.33 |
| " | | NSS-7 | C | LHC | 338.0 E | 246.3 | 23.2 |
| **India**, New Delhi | 28.36 N 77.12 E MV: 0.51 E | INTELSAT 906 | C | LHC | 64.0 E | 205.62 | 53.87 |
| **Ivory Coast**, Abidjan | 5.19 N 4.02 W MV: 8.54 W | NSS-7 | C | LHC | 338.0 E | 260.7 | 68.1 |
| **Israel,** Jerusalem | 31.46 N 35.14 E MV: 2.76 | HOTBIRD 4 | KU | V | 13.0 E | 214.9 | 46.2 |
| " | | INTELSAT 707 | C | RHC | 359 E | 231.69 | 36.57 |
| " | | NSS-7 | C | LHC | 338.0 E | 248.3 | 19.4 |
| " | | INTELSAT 906 | C | LHC | 64.0 E | 130.68 | 41.87 |
| Tel Aviv | 32.05 N 34.48 E MV: 3.13 E | INTELSAT 906 | C | LHC | 64.0 E | 130.03 | 40.97 |
| " | | HOTBIRD 4 | KU | V | 13.0 E | 213.5 | 46.0 |
| " | | INTELSAT 707 | C | RHC | 359 E | 230.22 | 36.68 |

| **AFRICA, MIDDLE EAST, SW ASIA Country, City** | **LAT LOG Magnetic Variation:** | **Satellite** | **Type** | **Polarization** | **Location:** | **Mag Azimuth:** | **Elevation:** |
|---|---|---|---|---|---|---|---|
| **Israel** Tel Aviv (continued) | | NSS-7 | C | LHC | 338.0 E | 247.7 | 19.7 |
| **Kenya**, Nairobi | 1.17 S 36.49 E MV:0.1W | INTELSAT 906 | C | LHC | 64.0 E | 87.90 | 57.85 |
| " | | NSS-7 | C | LHC | 338.0 E | 270.6 | 23.5 |
| " | | INTELSAT 707 | C | RHC | 359 E | 271.67 | 46.52 |
| **Kuwait**, Kuwait City | 29.30 N 47.45 E MV: 2.55E | INTELSAT 906 | C | LHC | 64.0 E | 146.19 | 51.29 |
| " " | | HOTBIRD 4 | KU | V | 13.0 E | 231.8 | 39.3 |
| " " | | INTELSAT 707 | C | RHC | 359 E | 244.01 | 27.64 |
| " " | | NSS-802 | C | LHC | 338.0 E | 256.79 | 9.68 |
| **Malawi**, Banjul | 13.28 N 16.39 W MV:11.28W | NSS-802 | C | LHC | 338.0 E | 212.55 | 73.30 |
| " " | " | INTELSAT 906 | C | LHC | 64.0 E | 103.51 | 0.66 |
| **Mali**, Bamako | 12.39 N 8.00 W MV: 7.15 W | INTELSAT 906 | C | LHC | 64.0 E | 101.14 | 8.98 |
| " | | NSS-7 | C | LHC | 338.0 E | 235.1 | 68.2 |
| " | | INTELSAT 707 | KU | RHC | 359 E | 157.37 | 73.31 |
| **Morocco**, Rabat | 34.02 N 6.51 W MV: 4.78 W | HOTBIRD 4 | KU | V | 13.0 E | 151.1 | 45.3 |
| " | | INTELSAT 707 | C | RHC | 359 E | 175.00 | 50.02 |
| " | | NSS-7 | C | LHC | 338.0 | 209.7 | 47.1 |
| **Mozambique**, Maputo | 26.00 S 32.25 E MV:17.08 W | INTELSAT 906 | C | LHC | 64.0 E | 71.77 | 43.55 |
| " | | INTELSAT 707 | C | RHC | 359 E | 320.85 | 42.32 |
| " | | NSS-7 | C | LHC | 338.0 E | 305.5 | 23.7 |
| **Pakistan**, Islamabad | 33.42 N 73.10 E MV: 1.59 E | INTELSAT 906 | C | LHC | 64.0 E | 194.63 | 49.92 |
| **Saudi Arabia** Jiddah (Jeddah) | 21.30 N 39.12 E MV: 2.02 E | INTELSAT 906 | C | LHC | 64.0 E | 124.93 | 51.65 |
| " | | HOTBIRD 4 | KU | V | 13.0 E | 231.1 | 51.4 |
| " | | NSS-7 | C | LHC | 338.0 E | 256.3 | 18.5 |
| " | | INTELSAT 707 | C | RHC | 359 E | 244.6 | 38.66 |
| KKMC | 27.80 N 45.50 E MV:2.37 E | INTELSAT 906 | C | LHC | 64.0 E | 140.6 | 51.1 |
| " | | HOTBIRD 4 | KU | V | 13.0 E | 231.1 | 41.8 |
| " | | NSS-7 | C | LHC | 338.0 E | 256.4 | 11.3 |
| " | | INTELSAT 707 | C | RHC | 359 E | 243.8 | 30.0 |

| **AFRICA, MIDDLE EAST, SW ASIA Country, City** | **LAT LOG Magnetic Variation:** | **Satellite** | **Type :** | **Polarization :** | **Location:** | **Mag Azimuth:** | **Elevation:** |
|---|---|---|---|---|---|---|---|
| **Saudi Arabia** (Continued) Riyadh | 24.39N 46.43 E MV: 2.13E | INTELSAT 906 | C | LHC | 64.0 E | 138.9 | 54.75 |
| “ | | HOTBIRD 4 | KU | V | 13.0 E | 235.8 | 43.1 |
| “ | | INTELSAT 707 | C | RHC | 359 E | 247.1 | 30.5 |
| “ | | NSS-7 | C | LHC | 338.0 E | 258.5 | 11.0 |
| Tabuk | 28.23 N 36.35E MV: 2.76 E | INTELSAT 906 | C | LHC | 64.0 E | 129.32 | 45.18 |
| “ | | HOTBIRD 4 | KU | V | 13.0 E | 219.6 | 48.2 |
| “ | | INTELSAT 707 | C | RHC | 359 E | 235.45 | 37.58 |
| “ | | NSS-7 | C | LHC | 338.0 E | 250.9 | 19.3 |
| **South Africa,** Capetown | 33.55 S 18.22 E MV: 22.00W | INTELSAT 906 | C | LHC | 64.0 E | 83.73 | 27.86 |
| “ | | INTELSAT 707 | C | RHC | 359 E | 349.75 | 45.86 |
| “ | | NSS-7 | C | LHC | 338.0 E | 327.0 | 32.2 |
| Pretoria | 25.45 S 28.10 E 14.29 W | INTELSAT 906 | C | LHC | 64.0 E | 73.59 | 40.40 |
| “ | | INTELSAT 707 | C | LHC | 359 E | 321.96 | 46.07 |
| “ | | NSS-7 | C | LHC | 338.0 | 305.9 | 27.7 |
| **Tunisia,** Tunis | 36.48 N 10.11 E MV: 0.44 E | INTELSAT 906 | C | LHC | 64.0 E | 113.01 | 20.13 |
| “ | | HOTBIRD 4 | KU | V | 13.0 E | 174.4 | 47.6 |
| “ | | INTELSAT 707 | C | RHC | 359 E | 197.84 | 46.07 |
| “ | | NSS-7 | C | LHC | 338.0 E | 225.8 | 35.9 |
| **Turkey** (See Europe table) | | | | | | | |
| **Uganda**, Kampala | 0.19 N 32.25 E MV: 0.28 | INTELSAT 906 | C | LHC | 64.0 E | 90.03 | 53.03 |
| “ | | NSS-7 | C | LHC | 338.0 E | 269.5 | 28.1 |
| **United Arab Emirates (UAE)**, Abu Dhabi | 24.28 N 54.22 E MV: 1.45 E | INTELSAT 906 | C | LHC | 64.0 E | 155.81 | 59.54 |
| “ | | HOTBIRD 4 | KU | V | 13.0 E | 243.4 | 36.3 |
| “ | | INTELSAT 707 | C | RHC | 359 E | 252.61 | 23.35 |
| **Yemen**, Sanaa | 15.23 N 44.12 E MV:1.28 E | HOTBIRD 4 | KU | V | 13.0 E | 244.9 | 50.1 |
| “ | | INTELSAT 707 | C | RHC | 359 E | 254.06 | 35.87 |
| “ | | NSS-7 | C | LHC | 338.0 E | 261.8 | 14.6 |
| “ | | INTELSAT 906 | C | LHC | 64.0 E | 124.72 | 60.93 |

| **AMERICAS Country, City** | **LAT LOG Magnetic Variation:** | **Satellite** | **Type** | **Polarization:** | **Location:** | **Mag Azimuth:** | **Elevation:** |
|---|---|---|---|---|---|---|---|
| **Columbia,** Bogota | 14.66 N 74.12 W MV: 5.0 W | INTELSAT 707 | C | RHC | 359 E | 99.40 | 7.70 |
| " | | NSS-7 | C | LHC | 338.0 E | 108.7 | 28.8 |
| **Cuba**, Guantanamo Bay | 19.93 N 75.12 W MV: 5.72 W | NSS-7 | C | LHC | 338.0 E | 112.0 | 26.6 |
| " | | GE 1 | C | V | 103.0 W | 242.92 | 50.71 |
| **Ecuador**, Quito | 0.13 S 78.30 W MV: 1.17 E | NSS-7 | C | LHC | 338.0 E | 91.6 | 25.9 |
| **Honduras**, Soto Cano AB | 14.37 N 87.60W MV:1.76 E | NSS-7 | C | LHC | 338.0 E | 103.9 | 24.6 |
| " | | GE 1 | C | V | 103.0 W | 226.22 | 65.46 |
| **Puerto Rico**, Roosevelt Roads | 18.23 N 65.65 W MV:12.87W | INTELSAT 707 | C | RHC | 359 E | 111.30 | 15.62 |
| " | | NSS-7 | C | LHC | 338.0 E | 121.2 | 36.4 |
| " | | GE 1 | C | V | 103.0 W | 260.58 | 42.65 |
| **Venezuela**, Caracas | 10.66 N 66.82 W MV: 9.87 W | INTELSAT 707 | C | RHC | 359 E | 104.62 | 15.36 |
| " | | NSS-7 | C | LHC | 338.0 E | 112.0 | 37.3 |

| **ASIA**<br>**Country, City** | **LAT LOG Magnetic Variation:** | **Satellite** | **Type** | **Polarization:** | **Location:** | **Mag Azimuth:** | **Elevation**: |
|---|---|---|---|---|---|---|---|
| **Burma**, Rangoon | 16.47 N 96.10 E MV:0.78 E | INTELSAT 906 | C | LHC | 64.0 E | 245.9 | 48.7 |
| **China** Beijing | 39.55 N 166.25 E MV:5.82 W | POR DTS | C | LHC | 180.0 E | 158.0 | 42.1 |
| Shanghai | 31.01 N 121.30E MV: 4.63 W | POR DTS | C | LHC | 180.0 E | 112.2 | 18.2 |
| “ | | INTELSAT 906 | C | LHC | 64.0 E | 256.4 | 19.5 |
| **Indonesia**, Jakarta | 6.10 S 106.48 E MV: 0.12W | INTELSAT 906 | C | LHC | 64.0 E | 276.74 | 40.57 |
| “ | | POR DTS | C | LHC | 180.0 E | 88.32 | 7.77 |
| **Japan** Iwakuni | 34.15 N 132.24 E MV: 7.27 W | POR DTS | C | LHC | 180.0 E | 117.0 | 25.99 |
| | | INTELSAT 802 | Ku | Vertical | 176.0 E | 127.4 | 29.1 |
| | | INTELSAT 906 | C | LHC | 64.0 E | 257.3 | 9.4 |
| Misawa (Misawa AB) | 40.68 N 141.36E MV:8.48 W | POR DTS | C | LHC | 180.0 E | 129.2 | 28.70 |
| “ | | INTELSAT 802 | Ku | Vertical | 176.0 E | 142.0 | 31.2 |
| Okinawa (Camp Butler) | 26.31 N 127.79 E MV: 4.28 W | POR DTS | C | LHC | 180.0 E | 113.24 | 24.48 |
| “ | | INTELSAT 802 | Ku | Vertical | 176.0 E | 116.0 | 29.1 |
| “ | | INTELSAT 906 | C | LHC | 64.0 E | 257.6 | 15.0 |
| Sasebo | 33.17 N 129.72 E MV: 6.01 W | POR DTS | C | LHC | 180.0 E | 114.4 | 24.4 |
| “ | | INTELSAT 802 | Ku | Vertical | 176.0 E | 124.4 | 27.6 |
| “ | | INTELSAT 906 | C | LHC | 64.0 E | 256.1 | 11.7 |
| Tokyo (Yokota AB) | 35.75 N 139.34 E MV:6.50 W | POR DTS | C | LHC | 180.0 E | 124.2 | 30.5 |
| “ | | INTELSAT 802 | Ku | Vertical | 176.0 E | 135.6 | 33.4 |
| **Johnston Island Atoll** | 16.73 N 169.52 W MV:1024 E | POR DTS | C | LHC | 180.0E | 202.48 | 66.94 |
| **Korea,** Kwangju | 35.09 N 126.54 E MV:6.69 W | POR DTS | C | LHC | 180.0 E | 113.1 | 21.0 |
| “ | | INTELSAT 802 | Ku | Vertical | 176.0 E | 116.2 | 24.2 |
| “ | | INTELSAT 906 | C | LHC | 64.0 E | 260.06 | 13.72 |
| Osan (Osan AB) | 37.08 N 127.03 E MV:7.22 W | POR DTS | C | LHC | 180.0 E | 121.68 | 20.58 |
| “ | | INTELSAT 802 | Ku | Vertical | 176.0 E | 125.1 | 23.6 |
| “ | | INTELSAT 906 | C | LHC | 64.0 E | 260.16 | 12.73 |
| Seoul | 37.60 N 126.98 E MV: 7.12 W | POR DTS | C | LHC | 180.0 E | 121.79 | 20.31 |
| “ | | INTELSAT 802 | Ku | Vertical | 176.0 E | 125.6 | 23.3 |
| “ | | INTELSAT 906 | C | LHC | 64.0 E | 259.83 | 12.61 |
| Taegu (AFKN) | 35.84 N 128.59 E MV:6.73 | POR DTS | C | LHC | 180.0 E | 121.78 | 22.34 |
| “ | | INTELSAT 802 | Ku | Vertical | 176.0 E | 125.7 | 25.4 |
| “ | | INTELSAT 906 | C | LHC | 64.0 E | 261.19 | 11.85 |
| **Malaysia, Singapore** | 1.22 N 103.48 E MV:0.43 W | INTELSAT 906 | C | LHC | 64.0 E | 268.95 | 44.29 |
| **Marshall Islands**, Kwajalein Island | 8.73 N 167.74 E MV:8.65 E | POR DTS | C | LHC | 180.0 E | 116.29 | 72.36 |

| **EUROPE Country, City** | **LAT LOG Magnetic Variation:** | **Satellite: Type:** | **Type** | **Polarization:** | **Location:** | **Mag Azimuth:** | **Elevation:** |
|---|---|---|---|---|---|---|---|
| **Albania**, Tirania | 41.20N 19.49E MV: 1.92 E | HOTBIRD 4 | KU | V | 13.0 E | 187.3 | 41.9 |
| " | | INTELSAT 707 | C | RHC | 359 E | 207.65 | 37.97 |
| " | | NSS-7 | C | LHC | 338.0 E | 230.8 | 26.5 |
| " | | INTELSAT 906 | C | LHC | 64.0 E | 121.90 | 24.55 |
| **Austria,** Vienna | 48.12N 16.22E MV: 2.15 E | HOTBIRD 4 | KU | V | 13.0 E | 182.1 | 34.7 |
| **Belgium**, SHAPE | 50.50N 04.20E MV: 1.95 W | HOTBIRD 4 | KU | V | 13.0 E | 170.0 | 31.5 |
| Mons | 50.58 N 4.05 E MV: 1.94 W | HOTBIRD 4 | KU | V | 13.0 E | 169.9 | 31.4 |
| **Bosnia Herzegovina**, Sarajevo | 43.52 N 18.25 E MV: 2.14 E | HOTBIRD 4 | KU | V | 13.0 E | 185.2 | 39.5 |
| **Bulgaria**, Sofia | 42.41N 23.19E MV: 2.91 E | HOTBIRD 4 | KU | V | 13.0 E | 191.8 | 40.0 |
| **Cyprus**, Nicosia | 35.10N 33.22E MV: 3.08 E | INTELSAT 906 | C | LHC | 64.0 E | 130.91 | 37.80 |
| " | | HOTBIRD 4 | KU | V | 13.0E | 209.3 | 43.9 |
| " | | INTELSAT 707 | C | RHC | 359 E | 226.71 | 35.50 |
| " | | NSS-7 | C | LHC | 338.0 E | 244.9 | 19.6 |
| **Finland**, Helsinki | 60.10N 24.58E MV: 6.23 E | HOTBIRD 4 | KU | V | 13.0 E | 187.2 | 21.1 |
| **France** Istres | 43.31N 04.59E MV:1.37 W | HOTBIRD 4 | KU | V | 13.0 E | 168.5 | 39.3 |
| Paris | 48.52N 02.20E MV: 2.46 w | HOTBIRD 4 | KU | V | 13.0 E | 165.9 | 38.6 |
| **Germany** Baumholder | 49.37N 07.20E MV: 1.23 W | HOTBIRD 4 | KU | V | 13.0 E | 172.7 | 33.1 |
| Bitburg | 49.58N 06.31E MV: 1.15 W | HOTBIRD 4 | KU | V | 13.0 E | 171.8 | 32.8 |
| Frankfurt | 50.13N 8.68 E MV: 0.46 W | HOTBIRD 4 | KU | V | 13.0 E | 174.2 | 32.4 |
| Garmisch | 47.29N 11.05E MV: 0.17 E | HOTBIRD 4 | KU | V | 13.0 E | 176.4 | 35.6 |
| Hannau | 50.08N 08.55E MV: 0.44W | HOTBIRD 4 | KU | V | 13.0 E | 196.1 | 32.4 |
| Heidelberg | 49.25N 08.43E MV: 0.47 W | HOTBIRD 4 | KU | V | 13.0 E | 173.9 | 33.3 |
| Kaiserlautern (Ramstein) | 49.26N 07.46E MV: 1.25 W | HOTBIRD 4 | KU | V | 13.0 E | 173.9 | 33.3 |
| " | | INTELSAT 707 | C | RHC | 359 E | 192.36 | 32.91 |
| " | | NSS-7 | C | LHC | 338.0 | 217.6 | 26.5 |
| " | | INTELSAT 906 | C | LHC | 64.0 E | 117.85 | 12.61 |
| Stuttgart | 48.46N 09.11E MV: 0.45 W | HOTBIRD 4 | KU | V | 13.0 E | 174.5 | 34.2 |
| Vilseck | 49.37N 11.48E | HOTBIRD 4 | KU | V | 13.0 E | | |
| Wiesbaden | 50.05N 08.14E MV: 0.37 E | HOTBIRD 4 | KU | V | 13.0 E | 173.7 | 32.4 |
| Wurzburg | 49.48N 09.56E MV: 0.64 E | HOTBIRD 4 | KU | V | 13.0 E | 175.0 | 33.2 |
| **Greece** Athens | 37.59N 23.44E | HOTBIRD 4 | KU | V | 13.0 E | 194.1 | 45.1 |
| (Crete) Souda Bay | 35.29N 24.42E MV: 2.44 E | HOTBIRD 4 | KU | V | 13.0 E | 196.7 | 47.2 |
| " | | INTELSAT 707 | C | RHC | 359 E | 216.50 | 40.89 |

| **EUROPE** Country, City | **LAT LOG Magnetic Variation:** | **Satellite Name:** | **Type** | **Polarization:** | **Location:** | **Mag Azimuth:** | **Elevation:** |
|---|---|---|---|---|---|---|---|
| (Crete) Souda Bay (continued) | | NSS-7 | C | LHC | 338.0 E | 238.6 | 26.5 |
| " | | INTELSAT 906 | C | LHC | 64.0 E | 122.41 | 31.24 |
| **Greenland**, Thule | 76.34N 68.47E MV: 68.33 W | GE 1 | C | V | 103.0 W | 283.63 | 2.53 |
| **Hungary**, Budapest | 47.30N 19.05E MV: 2.28 E | HOTBIRD 4 | KU | V | 13.0 E | 185.4 | 35.3 |
| **Iceland**, Keflavik | 63.96N 22.60W MV: 20.60W | HOTBIRD 4 | KU | V | 13.0 E | 160.6 | 12.4 |
| " | | INTELSAT 707 | C | RHC | 359 E | 176.82 | 15.72 |
| " | | NSS-7 | C | LHC | 338.0 E | 198.3 | 17.8 |
| **Ireland**, Dublin | 53.20N 06.15W MV: 7.70 W | HOTBIRD 4 | KU | V | 13.0 E | 162.6 | 26.7 |
| **Italy** Aviano | 46.04N 12.36E MV: 1.00 E | HOTBIRD 4 | KU | V | 13.0 E | 177.8 | 37.0 |
| La Maddalena | 41.13N 09.24E MV: 0.22 W | HOTBIRD 4 | KU | V | 13.0 E | 173.7 | 42.3 |
| Livorno (Pisa) | 43.33N 10.19E MV: 0.30 E | HOTBIRD 4 | KU | V | 13.0 E | 175.1 | 39.9 |
| " | | INTELSAT 707 | C | RHC | 359 E | 195.95 | 38.35 |
| " | | NSS-7 | C | LHC | 338.0 E | 221.7 | 30.5 |
| " | | INTELSAT 906 | C | LHC | 64.0 E | 116.66 | 17.10 |
| Naples | 40.50N 14.13E MV: 1.31 E | HOTBIRD 4 | KU | V | 13.0 E | 180.2 | 43.2 |
| " | | INTELSAT 707 | C | RHC | 359 E | 202.41 | 40.74 |
| " | | NSS-7 | C | LHC | 338.0 E | 226.7 | 30.4 |
| " | | INTELSAT 906 | C | LHC | 64.0 E | 117.82 | 21.91 |
| Sicily AFN-S Station Sigonella | 37.43N 14.97E MV: 1.01 E | HOTBIRD 4 | KU | V | 13.0 E | 181.7 | 46.6 |
| " | | INTELSAT 707 | C | RHC | 359 E | 204.21 | 43.47 |
| " | | NSS-7 | C | LHC | 338.0 E | 229.5 | 32.0 |
| " | | INTELSAT 906 | C | LHC | 64.0 E | 116.82 | 23.40 |
| Vicenza | 45.33N 11.33E MV: 0.13 E | HOTBIRD 4 | KU | V | 13.0 E | 176.6 | 37.8 |
| **Lithuania**, Vilnius | 54.41N 25.19E MV: 4.85 E | HOTBIRD 4 | KU | V | 13.0 E | 189.7 | 26.9 |
| **Madeconia**, (Former Yugoslav Republic), Skopje | 42.00N 21.29E MV: 2.30 E | HOTBIRD 4 | KU | V | 13.0 E | 189.4 | 40.8 |
| **Netherlands** The Hague | 52.05N 04.18E MV: 2.14 W | HOTBIRD 4 | KU | V | 13.0 E | 170.5 | 29.9 |
| Maastricht | 50.52N 05.43E MV: 2.10 W | HOTBIRD 4 | KU | V | 13.0 E | 171.2 | 31.7 |
| **Norway** Oslo | 59.55N 10.45E MV: 0.51 W | HOTBIRD 4 | KU | V | 13.0 E | 177.0 | 22.4 |
| Stavanger | 58.58N 05.45E MV: 3.35 W | HOTBIRD 4 | KU | V | 13.0 E | 171.8 | 22.9 |
| **Poland,** Warsaw | 52.13N 21.02E MV: 3.42 E | HOTBIRD 4 | KU | V | 13.0 E | 186.4 | 29.9 |
| **Portugal,** Azores (Lajes Field) | 38.30N 28.00W MV: 12.92 W | HOTBIRD 4 | KU | V | 13.0 E | 137.6 | 28.7 |
| " | | INTELSAT 707 | C | RHC | 359 E | 154.88 | 37.56 |
| " | | NSS-7 | C | LHC | 338.0 E | 184.4 | 45.2 |

| **EUROPE** Country, City | **LAT LOG Magnetic Variation:** | **Satellite:Type:** | **Type:** | **Polarization:** | **Location:** | **Mag Azimuth:** | **Elevation:** |
|---|---|---|---|---|---|---|---|
| **Portugal** (continued), Lisbon | 38.43N 09.08W MV: 5.72 W | HOTBIRD 4 | KU | V | 13.0 E | 151.3 | 39.9 |
| " | | INTELSAT 707 | C | RHC | 359 E | 172.55 | 44.37 |
| " | | NSS-7 | C | LHC | 338.0 E | 204.6 | 43.5 |
| **Romania**, Bucharest | 44.26N 26.06E MV: 3.98 E | HOTBIRD 4 | KU | V | 13.0 E | 194.6 | 37.3 |
| **Spain,** Madrid | 40.24N 03.41W MV: 3.70 W | HOTBIRD 4 | KU | V | 13. E | 158.2 | 40.5 |
| Moron (Moron de la Frontiera) | 37.08N 05.27W MV: 4.21 W | HOTBIRD 4 | KU | V | 13. E | 154.5 | 42.9 |
| Rota | 36.37N 06.21W MV: 5.01 W | HOTBIRD 4 | KU | V | 13.0 E | 153.0 | 43.2 |
| " | | INTELSAT 906 | C | LHC | 64.0 E | 107.04 | 7.04 |
| " | | INTELSAT 707 | C | RHC | 1.0 W | 176.11 | 47.13 |
| " | | NSS-7 | C | LHC | 338.0 E | 208.9 | 44.6 |
| **Sweden**, Stockholm | 59.20N 18.03E MV: 3.21 E | HOTBIRD 4 | KU | V | 13.0 E | 182.5 | 22.6 |
| **Switzerland**, Geneva | 46.12 N 6.09 E MV: 0.77 W | HOTBIRD 4 | KU | V | 13.0 E | 170.8 | 36.5 |
| **Turkey**, Adana | 37.01N 35.18E MV: 3.47 E | HOTBIRD 4 | KU | V | 13.0 E | 210.4 | 41.1 |
| Adara | 39.56N 32.52E MV: 3.61 E | HOTBIRD 4 | KU | V | 13.0 E | 205.3 | 39.9 |
| Incirlik | 37.00 N 35.83 E MV: 3.40 E | HOTBIRD 4 | KU | V | 13.0E | 211.2 | 40.8 |
| " | | INTELSAT 707 | C | RHC | 359 E | 227.82 | 32.40 |
| " | | NSS-7 | C | LHC | 338.0 E | 245.50 | 16.8 |
| " | | INTELSAT 906 | C | LHC | 64.0 E | 134.94 | 37.90 |
| Izmir | 38.25N 27.09E MV: 3.08 E | HOTBIRD 4 | KU | V | 13.0 E | 198.9 | 43.3 |
| " | | INTELSAT 707 | C | RHC | 359 E | 217.68 | 36.91 |
| " | | NSS-7 | C | LHC | 338.0 E | 238.6 | 22.9 |
| " | | INTELSAT 906 | C | LHC | 64.0 E | 126.41 | 31.49 |
| **Ukraine,** Kiev | 50.50 N 30.50 E MV: 5.76 E | HOTBIRD 4 | KU | V | 13.0 E | 196.6 | 29.8 |
| " | | INTELSAT 707 | C | RHC | 359 E | 212.69 | 24.97 |
| " | | NSS-7 | C | LHC | 338.0 E | 233.7 | 14.4 |
| " | | INTELSAT 906 | C | LHC | 64.0 E | 133.62 | 24.10 |
| **United Kingdom**, Cambridge | 52.13N 00.80E MV: 3.92 W | HOTBIRD 4 | KU | V | 13.0 E | 170.3 | 29.8 |
| London | 51.30N 00.07W MV:4.64 W | HOTBIRD 4 | KU | V | 13.0 E | 166.5 | 30.0 |
| Reading | 51.47N 0.98 W MV: 4.56 W | HOTBIRD 4 | KU | V | 13.0E | 165.8 | 29.6 |
| " | | INTELSAT 707 | C | RHC | 359 E | 184.59 | 31.09 |
| " | | NSS-7 | C | LHC | 338.0 E | 209.5 | 27.9 |

# *Appendix D AFRTS Satellite Information*

Current as of Monday, Sept 16, 2002

## AFRTS

### INTELSAT 802 (Japan and Korea Only)

Location: 174 degrees East
Transponder Antenna polarization: Vertical
Receiver Setting Polarization: "H" Horizontal
Ku Band Downlink Frequency: 11.6380GHz
Band: Low Ku/L
L-Band: 1888 MHz* (using 9.750 GHz LNB Frequency)
L-Band: 1638 MHz* (using 10.00 GHz LNB Frequency)
Symbol Rate: 28.0000 MS/s
FEC Rate: 3/4
52.8 dBW EIRP
Network ID 1
Coverage Map: http://www.intelsat.com/globalnetwork/coveragemaps/802@174.asp#
(spot 1 zone beam covering Japan and Korea)

### INTELSAT 701 (Pacific Ocean Region)

Location: 180 degrees East
Transponder Antenna Polarization: LHCP
Receiver Setting Polarization: "H" Horizontal
Band: C/L Band
C-Band Frequency: 4.1735 GHz
L-Band Frequency: 976.5 MHz
Symbol Rate: 3.6800 MS/s **(DTS Signal)**
FEC Rate: 2/3
EIRP: 29.0 dBW
Network ID 5
Coverage Map: http://www.intelsat.com/globalnetwork/coveragemaps/701@180.asp#
(global)

### INTELSAT 707 (South America, Africa, and Atlantic Ocean Region)

Location: 359 degrees East
Band: C/L Band
Transponder Antenna Polarization: RHCP
Receiver Setting Polarization: "H" Horizontal
C-Band Frequency: 4.1750 GHz
L-Band frequency: 975 MHz
Symbol rate: 28.0000 MS/s
FEC rate: 3/4
29 dBW EIRP
Network ID 3

Coverage Map: http://www.intelsat.com/globalnetwork/coveragemaps/707@359.asp (global)

### Telstar-5 (United States)

Location: 97 degrees West
Band: C/L Band
C-band frequency: 4.060 GHz, HP
L-Band frequency: 1090 MHz
Symbol rate: 28.0000 MS/s
FEC rate: 3/4
EIRP: 37 dBW
Network ID 9
Coverage Map (not-official): http://www.geo-orbit.org/westhemipgs/ft5p.html

### HotBird 4 (Europe)

Location: 13 degrees East
Band: Low Ku/L
Transponder Antenna Polarization: Vertical
Receiver Setting Polarization: "H" Horizontal
Ku Band Downlink Frequency: 10.775 GHz
L-Band/LO frequency: 1025 MHz* (9.750 MHz LNB Frequency)
Symbol rate: 28.0000 MS/s
FEC rate: 3/4
EIRP: 50.0 dBW
Network ID 6
Coverage map: http://www.eutelsat.org/satellites/coverage/downlink/13ehb4.gif

## Direct To Sailor (DTS)

### INTELSAT 701 (Pacific Ocean)

Location: 180 degrees East
Band: C/L Band
Transponder Antenna Polarization: LHCP
Receiver Setting Polarization: "H" Horizontal
C-Band frequency: 4.1735 GHz
L-Band frequency: 976.5 MHz
Symbol Rate: 3.6800 MS/s
FEC rate: 2/3
EIRP: 29.0 dBW
Network ID 5
Coverage map: http://www.intelsat.com/globalnetwork/coveragemaps/701@180.asp (global)

## INTELSAT 906 (Indian Ocean and Persian Gulf)

Location: 64.1 degrees East
Band: C/L Band
Transponder Antenna Polarization: LHCP
Receiver Setting Polarization: "H" Horizontal
C-Band frequency: 4080 MHz
L-Band frequency: 1070 MHz
Symbol Rate: 3.6800 MS/s
FEC Rate: 2/3
EIRP: 29.0 dBW
Network ID 7
Coverage map: http://www.intelsat.com/globalnetwork/coveragemaps/906@64.asp (global)

## New Skies NSS-7 (Atlantic Ocean and Mediterranean Sea)

Location: 338.0 degrees East
Band: C/L Band
Transponder Antenna Polarization: LHCP
Receiver Setting Polarization: "H" Horizontal
C-Band frequency: 4127 MHz
L-Band frequency: 1023 MHz
Symbol Rate: 3.6800 MS/s
FEC Rate: 2/3
EIRP: 30.5 dBW
Network ID 6
Coverage map: http://www.newskies.com/PBFleet/fleet7new.asp (global)

## AMC-1 (Very large domestic dishes only)

Location: 103 degrees West
Band: C/L Band
Transponder Polarity: Horizontal
C-Band frequency: 4.065.75 GHz
L-Band frequency: 1.084.25 GHz
Network ID 9
Coverage map: http://www.ses-americom.com/satellites/amc-1.html

* **Important note on LNB frequencies**: all C-band LNB's have a local oscillator (L.O.) frequency of 5.150 GHz but Ku-band LNB's may come in many different frequencies typically 9.750 to 12.75 GHz. This means that if you're attempting to watch a Ku-band service you need to set the decoder's frequency using a bit of simple math. The formula to set the Ku-Low/Single L.O. frequency on the AFRTS decoder is the downlink frequency minus the L.O. frequency. As an example the downlink frequency for the IntelSat 802 satellite serving the Japan and Korea Direct to Home service area is 11.6380 GHz. An LNB with a local oscillator frequency of 10.000 GHz would give a Ku Low/Single L.O. frequency of 1638 MHz (1.638 GHz) by working the math problem 11.16380 – 10.000 = 1.638. The Ku-band satellite serving the European service area is HotBird 4 at 13 degrees east and it has a downlink frequency of 10.775 GHz. Connecting an LNB with a local oscillator frequency of 9.750 would result in a receiver frequency of 1025 MHz (10.775 – 9.750 = 1.025 GHz which is 1025 MHz).

## List of Tables

Table 4-1 Spectrum Analyzer Setup ..... 4-17
Table 4-2 Typical Satellite Receiver Setup ..... 4-17
Table 4-3 Bit Error Rate to Threshold Margin Table ..... 4-18
Table 5-1 Downstream Channel Capacity ..... 5-2
Table 5-2 Upstream channel capacity ..... 5-2
Table 5-3 Performance Standards for Acceptable CATV Operations ..... 5-4
Table 6-1 TV Services Cue Fuction Assignments ..... 6-3
Table 6-2 Radio Service Cue Function Assignments ..... 6-3
Table 6-3 BCD Function ..... 6-4
Table 7-1 64 Kbps high-speed pin-out ..... 7-11
Table 7-2 SR menu commands ..... 7-13
Table 7-3 Test Tool Commands ..... 7-13
Table 7-4 SR-8 voice channel settings ..... 7-13
Table 7-5 IRD polling commands ..... 7-19

## List of figures

Figure 3-1 Block level system diagram ..... 3-2
Figure 3-2 Connecting an IRD to a monitor or TV receiver ..... 3-4
Figure 3-3 AFRTS SATNET network diagram ..... 3-5
Figure 3-4 AFRTS SATNET Telestar 5 footprint ..... 3-5
Figure 3-5 AFRTS SATNET INTELSAT 802 footprint ..... 3-6
Figure 3-6 AFRTS INTELSAT 707 ..... 3-6
Figure 3-7 AFNE Hotbird 4 ..... 3-7
Figure 3-8 DTS Satellite network diagram ..... 3-9
Figure 3-9 IntelSat 701 Pacific Ocean ..... 3-10
Figure 3-10 New Skies NSS-7 Atlantic Ocean and Mediterranean Sea ..... 3-10
Figure 3-11 IntelSat 906 Indian Ocean and Persian Gulf ..... 3-11
Figure 4-1 Satellite dish parts ..... 4-3
Figure 4-2 An offset satellite antenna ..... 4-4
Figure 4-3 Feedhorn assembly ..... 4-6
Figure 4-4 Focal length ..... 4-7
Figure 4-5 IRD Connections ..... 4-13
Figure 4-6 Look angle adjustment ..... 4-14
Figure 4-7 Azimuth setting ..... 4-15
Figure 4-8 BSR Main Menu ..... 4-30
Figure 4-9 Receiver Status Menu ..... 4-30
Figure 4-10 Receiver Setup Menu ..... 4-31
Figure 7-1 PowerVu Datacasting ..... 7-2
Figure 7-2 PowerVu IRD RS-232 wiring ..... 7-3
Figure 7-3 SR-8 connection to a printer and Figure 7-4 SR-8 connection to a PC terminal device ..... 7-8
Figure 7-5 SR-8 network management port to a terminal and ..... 7-9
Figure 7-6 SR-8 network management port to a PC terminal ..... 7-9
Figure 7-7 PowerVu datacasting network ..... 7-10
Figure 7-8 SR-8 wiring ..... 7-11
Figure 7-9 PowerVu Multiplexer to SR-8 and Figure 7-10 PowerVu IRD to SR-8 ..... 7-12
Figure 7-11 SR-8 output ports ..... 7-12
Figure 7-12 Fazzt network ..... 7-15
Figure 7-13 IRD to Kencast connection ..... 7-15
Figure 7-14 Fazzt configuration and interface ..... 7-16
Figure 7-15 IRD control via a PC ..... 7-18
Figure 7-16 Single IRD polling and Figure 7-17 Dual IRD polling ..... 7-18

# *Index*


1.544 Mbps High Speed Data Channel, 7-14
64 Kbps High Speed Data Channel, 7-3
9223 Decoders
  Operating System Download Procedures, 10-2
9234 Decoders
  Operating System Download Procedures, 10-1
Activation procedures, 2-1
AFN entertainment, 3-6, 3-11
AFN News, 3-6, 3-8, 3-11
AFN Sports, 3-6, 3-8, 3-11
AFRICA, 11
AFRTS Operations, 1-1
Aiming a satellite antenna, 4-11
AIN (Affiliated Information Network program notes), 7-3
Aircraft Radar Altimeters, 4-23
Airport Ground Radar, 4-23
AMERICAS, 15
Amplifiers “LNA/B/C/F”, 4-4
Antenna Focal length, 4-7
Antenna Reflector, 4-3
Antenna Setup, 4-13
Appendix C: Dish Pointing Data, 11
ASIA, 16
Asynchronous Port Specifications, 7-7
attenuator pads, 4-25
AudioVault, 6-2
BCD Function, 6-4
Bit Error Rate (BER), 4-11
Bit Error Rate Reading, 4-18
Bit Error Rate to Threshold Margin Table, 4-18
Bit Rate, 4-10
B-MAC, 5-1
Brewster Washington, 3-6
broadband interference, 4-23
buy my own decoder, 1-6
cable distribution, 5-1
CATV amplifiers, 5-3
C-Band Satellite Service, 3-5
Censorship, 1-1
Clarke Belt, 4-1
Closed Caption Service, 9-1
Color Performance Requirements, 5-6
Commercial Microwave Ovens, 4-24
Commercials, 1-1
Compression, 4-25
Concealment, 4-21
Connecting the Antenna and Receiver, 4-12
Cue Decoder Installation and Operation, 6-5
Cueing, 6-1
Data Channel Troubleshooting Guide, 7-17
Datacasting, 7-1
Datacasting on DTS, 7-15
Decoder Setup Instructions, 4-27, 4-29
demultiplexer, 7-4
Department of State, 1-2
Destructive Interference, 4-20
Direct-To-Sailors Satellite Network (DTS), 3-9
Distribution of Multiple Video and Audio Services, 5-1
Downlink Reception, 4-1
Downstream Channel Capacity, 5-2
DTS Link Calculations, 11
DTS Satellite Network Architecture, 3-9
DTS Virtual Channel Guide, 5
Early Bird, 3-11
Earth Berms, 4-26
Ebay.com, 1-6
Equipment Configuration, 4-1
Equipment Needed for Direct to Sailor (DTS) C-band Digital Reception, 4-10
Equipment Needed for SATNET C-band Digital Reception, 4-8
Equipment Needed for SATNET Ku-band Digital Reception, 4-9
Error Correction, 4-21
EUROPE, 17
European Ku-Band Satellite Services, 3-7
Fazzt, 7-14, 7-15, 7-16, 7-17, 7-18
Feedhorn Adjustments, 4-7
Feedhorn Assembly, 4-6
Finding a Clear line of Sight, 4-12
finding the AFRTS digital satellite signals, 4-11
freeze frames, 4-34
Goonhilly, 3-10
Holmdel New Jersey, 3-6
Hotbird 4, 3-8
Impulse and Ignition Noise, 4-22
integrated receiver/decoder, 3-4
Interference, 4-22
interference from airports, 4-23
interrupt problem, 7-17
IRD Authorization, 4-11
IRD Control, 7-18
IRD Polling, 7-18
isotropic radiated power, 3-9
L-band Frequency, 4-17
List of figures, 23
List of Tables, 23
LNB Performance, 4-6
local oscillator, 22
local oscillator (L.O.) frequency, 4-28, 4-32
Loopback Mode, 7-9
Low Noise Block Converter Amplifier, 3-4

Magnetic compass, 4-15
MIDDLE EAST, 11
MMDS systems, 5-1
Model 9223 Setup, 4-27
Model 9234 Setup, 4-29
MPEG, 3-3
MPEG signal, 4-1
MPEG-2, 3-2
Navy News Wire Service, 3-11
Network Alert System, 8-1
New York Times Fax., 3-12
NewsBoss, 7-4, 8-1
Odetics, 6-1
On-Line Multiplexing, 7-9
on-screen menu, 4-33
Out-of-band Filtering, 4-25
Peaking the Antenna, 4-15
Performance Specifications, 5-1
Performance Standards for Acceptable CATV Operations, 5-4
Personal Communication Systems (PCS), 4-24
Picking Up the Satellite Signal, 4-14
Polarization, 4-2, 4-8
PowerVu, 3-2
  Introduction, 3-1
Protection from Interference, 4-25
Quadrature Phase Shift Keyed (QPSK), 4-20
Quick Turn-Around Programming, 6-1
radio networks, 3-7
Radio Service Cue Function Assignments, 6-3
Radio Waves, 4-2
Random RFI, 4-24
Receiver Setup, 4-17
Receiver/Decoder Threshold, 4-10
rent a decoder, 1-4
RF Interference, 4-19
RF Link Budgets, 8
RFI (Radio Frequency Interference) Fencing, 4-25
Satellite Concepts, 4-1
SATNET C-Band Link Budget, 9
SATNET Ku-Band Link Budget, 10
Saturation, 4-25
scalar feedhorn, 4-6
Scheduling of Tests, 5-5
serial printer, 7-2
Ship-board Radar, 4-23
Signal Frequency, 4-2
Signal Leakage, 5-3
Signal Quality, 5-3
Simultaneous Receiver Decoder (SRD), 1-3
soft decision convolutional decoding, 4-21
Spectrum Analyzer, 4-5, 4-14, 4-16, 4-17
Spectrum Analyzer Setup, 4-17
Spectrum channel, 3-7
SRD Equipment Configurations, 1-3
STB file, 6-1
Sun Outages, 4-19
SW ASIA, 11
Technical Reference
  DTS, 1
  SATNET, 1
Technical Reference
  SATNET, 1
Television and Radio Network Alert messages (NAS), 7-3
Terrestrial Microwave Interference, 4-22
Testing Procedures, 5-1, 5-5
Tracking ID's (TIDS), 10-3
Trouble shooting satellite antennas, 4-16
Troubleshooting Guide, 4-33
TV Services Cue Function Assignments, 6-3
Uninterruptible Voiceline, 3-7, 3-8, 3-11
Upstream Channel Capacity, 5-2
Usingen, 3-8
Virtual Channel Guide, 3-6, 3-8, 3-10
Virtual Channel Guide for Data Services for AFRTS-BC, 6, 7
Virtual Channel Guide for Data Services for ARNE
  AFNE, 7
Virtual Channel Listings
  AFNE, 4
  AFRTS-BC, 2
Wegener Tone Decoder, 6-2

# Record of Publication and Changes Page

| Date | Change |
|---|---|
| 15 Mar 2002 | Changed look angles for all former EutelSat, now HotBird 4 customers. |
| 18 Mar 2002 | Changed drawings to photographs in chapter 4. |
| 19 Mar 2002 | Added item 14 (computer programs) to Fazzt requirements in chapter 7. Added appendix D. |
| 30 Mar 2002 | Added figure 3-8, edited figure 3-3 graphics. |
| 1 Apr 2002 | Published Version 2.00 |
| 18 Apr 2002 | Removed IntelSat 702 data and added IntelSat 802 in Appendix D and chapter 3. |
| 19 Apr 2002 | Corrected labels and references to figures 4-7, 4-8, and 4-9 (now 4-10). Fixed figures 4-6, 4-7, and a bug with “list 2” style. |
| 23 Apr 2002 | Removed IntelSat 702 data from Pacific sites not covered by IntelSat 802 in Appendix C. Added links to coverage maps in Appendix D. |
| 24 Apr 2002 | Reformatted figure labels and numbering of tables in chapter 4. |
| 25 Apr 2002 | Updated virtual channel guide changing Channel Guide to Program Guide. Added AFN prefix to some services. Corrected chapter 7’s figure and table labels. |
| 9 May 2002 | Fixed wiring error in figure 7-2. Wiring to and from the RS-232 was reversed. Fixed label for port 4 in figure 7-7. Added missing steps 5-7 to quick set up procedure. Created Version 2.02 |
| 26 Jun 2002 | Updated figures 3-5, 3-6, and 3-7 |
| 27 Jun 2002 | Published version 2.02 |
| 15 July 2002 | Removed Whitinsville uplink and replaced with Holmdel NJ for Sept ’02 change. |
| 15 July 2002 | In chapter 7 all references to chapter three were changed to Appendix A as the virtual channel guide is now an appendix. |
| 18 July 2002 | Added SR-8 menu commands to chapter 7 in tables 7-2, 7-3, and 7-4. |
| 25 July 2002 | Reviewed chapter 2 for updates and removed Deb Weitenhagen’s email from notification list. |
| 5 Aug 2002 | Moved decoder setup information from chapter 4 into appendix D. Explained Ku-band decoder L.O. setup. |
| 6 Aug 2002 | Published version 2.03 |
| 7 Aug 2002 | Replaced figures 3-8, 3-9, and 3-10. |
| 12 Aug 2002 | Added DTS virtual channel information to appendix A. |
| 3 Sep 2002 | Changed Scientific Atlanta’s RMA POC to Susan Ramkishun and changed contact phone number. |
| 3 Sep 2002 | Corrected data in figure 3-5. |
| 3 Sep 2002 | Updated DX procedures points of contacts changing T-ASA and HQ phone numbers. |
| 16 Sep 2002 | Changed the name of NSS-803 to NSS-7, fixed figure 3-8 changing name of GE-1 to AMC-1. |
| 18 Sep 2002 | Published version 2.04. |
| 19 Sep 2002 | Replaced figure 4-10. |
| 19 Sep 2002 | Added polarization setting instructions in chapter 4’s receiver set-up step-by-step procedures. |
| 30 Sep 2002 | Added how to read TIDs section to chapter 10 |
| 16 Oct 02 | Changed polarization setting in chapter 4’s step-by-step to H (fixed) rather than just H. |
| 18 Oct 02 | Changed NSS-7 location from to 338.0 from 338.0 degrees, fixed some minor spelling errors. |
| 31 Oct 02 | Added cues 9 and A to table 6-1 TV cues. |
| 6 Nov 2002 | Removed Fort Greeley Alaska, Panama and SCN from appendix C. |
| 7 Nov 2002 | Published version 2.05 |
| 21 Nov 2002 | Changed audio services 1 and 2 on virtual channel 1 to Sports 1 (ESPN) and Sports 2 (FOX) in appendix A |

| | |
|---|---|
| 21 Nov 2002 | Removed IntelSat 703 and added IntelSat 802 to Asian area of appendix C |
| 21 Nov 2002 | Removed IntelSat 804 and replaced with IntelSat 906, changed figures 3-8 and 3-11 |
| 21 Nov 2002 | Fixed broken links to IntelSat's coverage maps in appendix D |
| 25 Nov 2002 | Fixed footers and page numbers in appendix Table and Headers. |
| 25 Nov 2002 | Changed audio services 2 and 3 on channel 1 in appendix A |
| 25 Nov 2002 | Published version 2.06 |
| 2 Dec 2002 | Edited appendix D pointing out the difference between antenna and receiver polarity and updated NSS-7 EIRP to 30.5 dB |
| 2 Dec 2002 | Added technologist@dodmedia.osd.mil email address to notification section of chapter 2. |
| 9 Jan 2003 | Updated virtual channel guide in appendix A. |
| 15 Jan 2003 | Undated decoder authorization process in chapter 1. |
| 16 Jan 03 | Added faxable authorization form to chapter 1. |
| 28 Jan 03 | Updated virtual channel guide in appendix A. |
| 28 Jan 03 | Published version 2.07 |
| 29 Jan 03 | Updated figure 3-7 in chapter 3 with proper beam shape. |
| 6 Feb 03 | Changed NSS-7 location to 338.0 in appendixes C and D and on figure 3-8 in chapter 3. |
| 24 Feb 03 | Changed DOEE e-mail addresses to DEE in chapters 2 and 10. |
| 24 Feb 03 | Published version 2.08 |
| 27 Mar 03 | Added sun outage description and troubleshooting areas in chapter 4 pages 4-19 and 4-33. |
| 3 Apr 03 | Updated virtual channel guide in appendix A adding Pentagon Channel |
| 30 Apr 03 | Added description of Pentagon Channel to chapter 3 |
| 12 May 03 | Updated authorization procedures in chapter 2 |
| 12 May 03 | Added privilege-holding employees of companies working DoD contracts as authorized viewers in chapter 1 |
| 12 May 03 | Changed AFRTS-HQ phone numbers in chapters 1 and 2. |
| 5 Jun 03 | Updated changes to AFNE radio services in appendix A. |
| 5 Jun 03 | Published version 2.09 |
| | |
| | |
| | |
| | |
| | |
| | |
| | |
| | |
| | |
| | |
| | |
| | |
| | |